REVIEW OF ENVIRONMENTAL FACTORS (REF)
ACCESSIBLE VIEWING PLATFORM AND ASSOCIATED WORKS
SURFERS AVENUE
NARRAWALLEE

Contents

1. PROPOSED ACTIVITY AND LOCATION 5
1.1 Proposed activity 5
1.2 Location 5
2. EXISTING ENVIRONMENT 8
2.1 Habitat and vegetation assessment 8
2.2 Subsurface 8
2.3 Memorial plaque 9
2.4 Shoalhaven Water Infrastructure 10
2.5 Coastal Hazards and Slope Instability 11
2.6 Other 12
2.7 Photos 13
3. ASSESSMENT OF LIKELY IMPACTS ON THE ENVIRONMENT 17
3.1 Impacts associated with the proposed activity 17
3.2 Vegetation Removal 17
3.3 Threatened species impact assessment (NSW) 18
3.3.1 Part 7A *Fisheries Management Act 1994* 18
3.3.2 Part 7 *Biodiversity Conservation Act 2016* 18
3.4 Indigenous heritage 21
3.5 Non-indigenous heritage 24
3.6 Impacts on neighbouring residents 24
3.7 Recreational impacts 25
3.8 EP&A Regulation – Section 171 matters of consideration 25
4. PERMISSIBILITY 31
4.1 Environmental Planning & Assessment Act 1979 31
4.2 NSW Crown Land Management 2016 31
4.3 NSW Local Government Act 1993 32
4.4 NSW Aboriginal Land Rights Act 1983 32
4.5 NSW Heritage Act 1977 32
4.6 NSW Biodiversity Conservation Act 2016 33
4.7 Commonwealth *Native Title Act 1993* 33
4.8 Other 34
5. CONSULTATION WITH GOVERNMENT AGENCIES 38
5.1 Transport & Infrastructure SEPP 38
5.2 SCC Asset Custodian 39

6. COMMUNITY ENGAGEMENT 40
7. ENVIRONMENTAL SAFEGUARDS AND MEASURES TO MINIMISE RISK OF ENVIRONMENTAL IMPACTS 41
8. SIGNIFICANCE EVALUATION & DECISION STATEMENT 46
9. REFERENCES 47
APPENDIX A – The Proposed Activity 48
APPENDIX B – Threatened Species Likelihood of Occurrence 49

Document control

Item	Details
Project	Review of Environmental Factors – Accessible viewing platform and associated works – Surfers Avenue - Narrawallee
Client	City Development, Shoalhaven City Council
Prepared By	City Services, Shoalhaven City Council

Document status

Version	Author / Reviewer*	Name	Signed	Date
V1.0	Author	Geoff Young		21/11/2022
	Reviewer	Jeff Bryant		05/12/2022
	Client Review	Luke Moroney		17/10/2022

*Review and endorsement statement:

"I certify that I have reviewed and endorsed the contents of this REF document and, to the best of my knowledge, it is in accordance with the EP&A Act, the EP&A Regulation and the Guidelines approved under clause 170 of the EP&A Regulation, and the information it contains is neither false nor misleading".

Assessment and approvals overview

Item	Details
Assessment type	Division 5.1 (EP&A Act) - Review of Environmental Factors (REF)
Proponent	Shoalhaven City Council – City Development
Determining authority / authorities	Shoalhaven City Council – City Services
Required approvals (consents, licences and permits)	Nil
Required publication	Yes: this REF must be published on the determining authority's (Council's) website or the NSW planning portal, in accordance with clause 171(4) EP&A Regulation 2021 (as a matter of "public interest").

1. PROPOSED ACTIVITY AND LOCATION

1.1 Proposed activity

The proposed activity is the construction of an accessible viewing platform, walkway, single accessible carpark and associated items off Surfers Avenue, Narrawallee overlooking Narrawallee Beach.

The activity would include:

- elevated 18m^2 viewing platform (3 by 6 metres) and elevated boardwalk (1.5 metres wide by ~10 metres long) comprising mini-mesh decking
- single accessible carpark and associated land filling and battering and signage
- concrete connecting path of variable widths (minimum 1.5 metre wide)
- coppers log barrier fencing
- revegetation with native species
- raising of sewer manholes to suit new level (of path)
- relocation of existing bench seat and bin
- replacement of existing layback crossing to meet Shoalhaven City Council (SCC) standard.

Plans are provided as Appendix A with an overview provided in Figure 2 below.

Works would also involve the implementation of prescribed safeguards and environmental impact mitigation measures (refer to Section 7 of this REF).

Shoalhaven City Council (SCC) is the proponent and the determining authority under Part 5 of the EP&A Act. The environmental assessment of the proposed activity and associated environmental impacts has been undertaken in the context of Clause 171 of the *Environmental Planning and Assessment Regulation 2021*. In doing so, this Review of Environmental Factors (REF) helps to fulfil the requirements of Section 5.5 of the Act that SCC examine and take into account to the fullest extent possible, all matters affecting or likely to affect the environment by reason of the activity.

1.2 Location

The proposed activity would be undertaken within (Figure 1 below):

- the Surfers Avenue Road reserve to which Shoalhaven City Council (SCC) is the road authority under the NSW Roads Act 1993
- Lot 365 DP 221892 which is owned by SCC in freehold title and managed as community land – park (“Surfers Avenue North Reserve”)
- Lot 7009 DP 1116370 which is a Crown Reserve to which SCC is the appointed Crown Land Manager (CLM) under the NSW *Crown Land Management Act 2014.*

The new accessible carpark would utilise and extend from an existing vehicle access track off Surfers Avenue through the subject lands. This track was constructed to access the Shoalhaven Water Sewage Pumping Station (SPS). The access track is also used by people to access the beach.

Figure 1 Location of the Proposed Activity

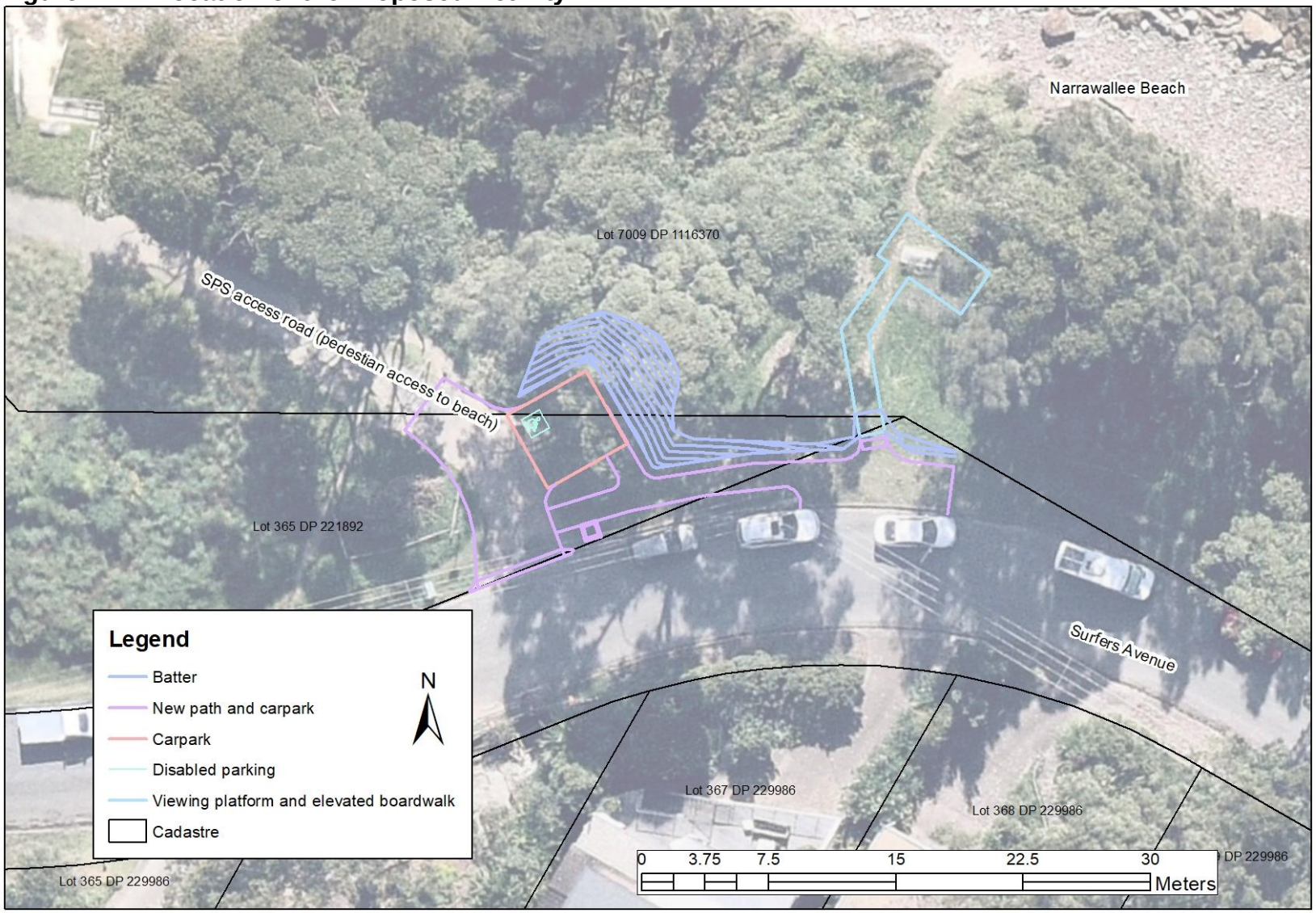

Figure 2 Extract of Plans (refer to Appendix A for full set of plans)

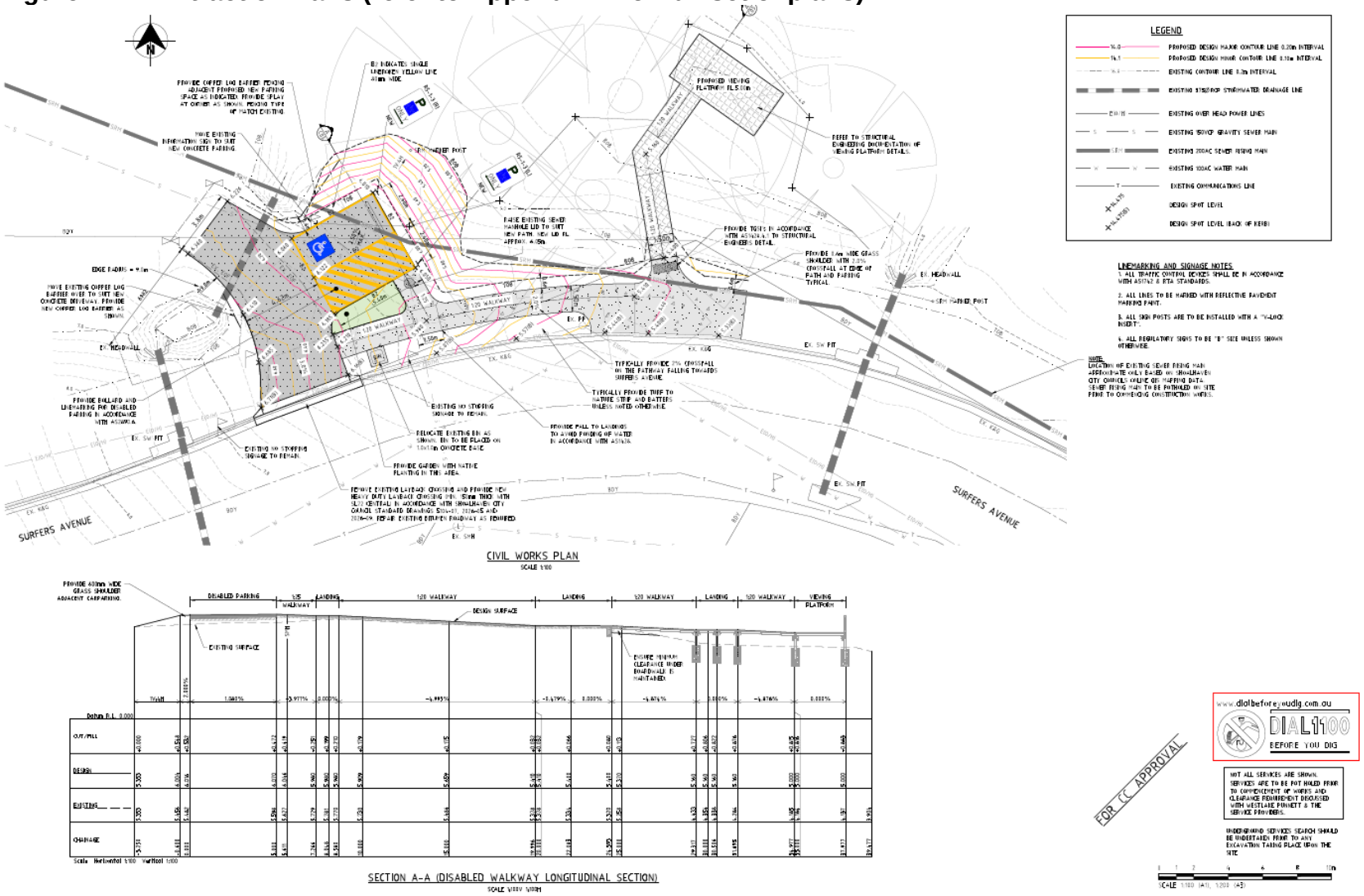

2. EXISTING ENVIRONMENT

The proposed activity would be conducted on the northern side of Surfers Avenue at the southern end of Narrawallee Beach, Narrawallee.

The activity would predominantly be undertaken on cleared and regularly mown areas. The accessible carpark and associated batters would be partly constructed on a vegetated, unmown area dominated by the environmental weed Montbretia *Crocosmia x crocosmiiflora* underneath Bangalay *Eucalyptus botryoides* and Swamp Oak *Casuarina glauca.*

Photographs of the site are provided in Section 2.4 below.

2.1 Habitat and vegetation assessment

The cleared areas comprise regularly mown grass predominantly of white clover *Trifolium repens,* kikuyu *Cenchrus clandestinus,* Paspalum *Paspalum dilatatum,* and native violet *Viola hederacea.*

The vegetated and unmown area of the proposed carpark and batters comprise mainly of Montbretia swathes with native and non-native(*) species such as *Lomandra longifolia,* Native Raspberry *Rubus parvifolius,* Scurvy Weed *Commelina cyanea,* Native Violet, Bracken *Pteridium esculentum,* Pennywort *Hydrocotyle bonariensis*,* and *bidens pilosa** underneath Swamp Oak, Bangalay, Swamp Lily *Crinium pedunculatum,* Sweet Pittosporum *Pittosporum undulatum,* Coastal Wattle *Acacia sopharae,* Coffee Bush *Breynia oblongifolia,* and Bleeding Heart Tree *Homalanthus popilifolius.* The species assemblage is characteristic of the endangered ecological community (EEC) *Bangalay Sand Forest of the Sydney Basin and South East Corner Bioregions,* however the site is not on sands of marine or aeolian origin (refer to Section 2.2 below) and therefore does not comprise the EEC.

No threatened flora or suitable habitat for locally occurring threated flora was identified on site during site surveys.

No hollow-bearing trees, nests, Glossy Black Cockatoo (*Calyptorhynchus lathami*) feed tree species (*i.e. Allocasuarina littoralis*) or Glider feed tree species (e.g. *Corymbia gummifera* or *Eucalyptus punctata*) occur within the site. No signs of potential threatened fauna use of the site were identified.

2.2 Subsurface

The site of Surfers Avenue and the proposed viewing platform is underlain by alluvial gravel and clay deposits which are closely associated with basalts of similar age near Ulladulla. This is underlain at depth by Snapper Point Sandstone (MinView 2022, Figure 3 below). Silcrete is present to the south of the site. The geology indicates a low risk of acid sulfate soils.

To the north of the site, towards the Narrawallee Beach, coastal sand deposits (beach facies) exist. These comprise marine-deposited quarts-lithic fine to medium-grained sand, shell and shell material (MinView 2022).

The geotechnical assessment (Douglas Partners 2022) found that:

- 0.2 to 0.3 metres of topsoil fill over the site
- up to one metre of clayey and/or gravelly fill near the existing culverts, near the existing sewer and manholes and where the road verge has been apparently filled

- the site has variably firm to stiff colluvium to depths of about two to three metres and typically stiff, medium plasticity clays underlying the colluvium to depths of at least five metres

Douglas Partners 2022 identified the following key geotechnical considerations for the site:

- Potential uncontrolled fill in the vicinity of the existing culvert as well as sewer backfill and adjacent to Surfers Avenue
- Ongoing erosion near the existing culvert outlets due to overland stormwater flows.
- Seepage through the colluvial soils.
- The site may be subject to coastal processes with structural risks increasing if predicted sea level rises are realised (refer to Section 2.5 below for more information).

A number of recommendations were made by Douglas Partners which have been incorporated into the Structural Design for the proposed activity (Appendix A).

Figure 3 Geology

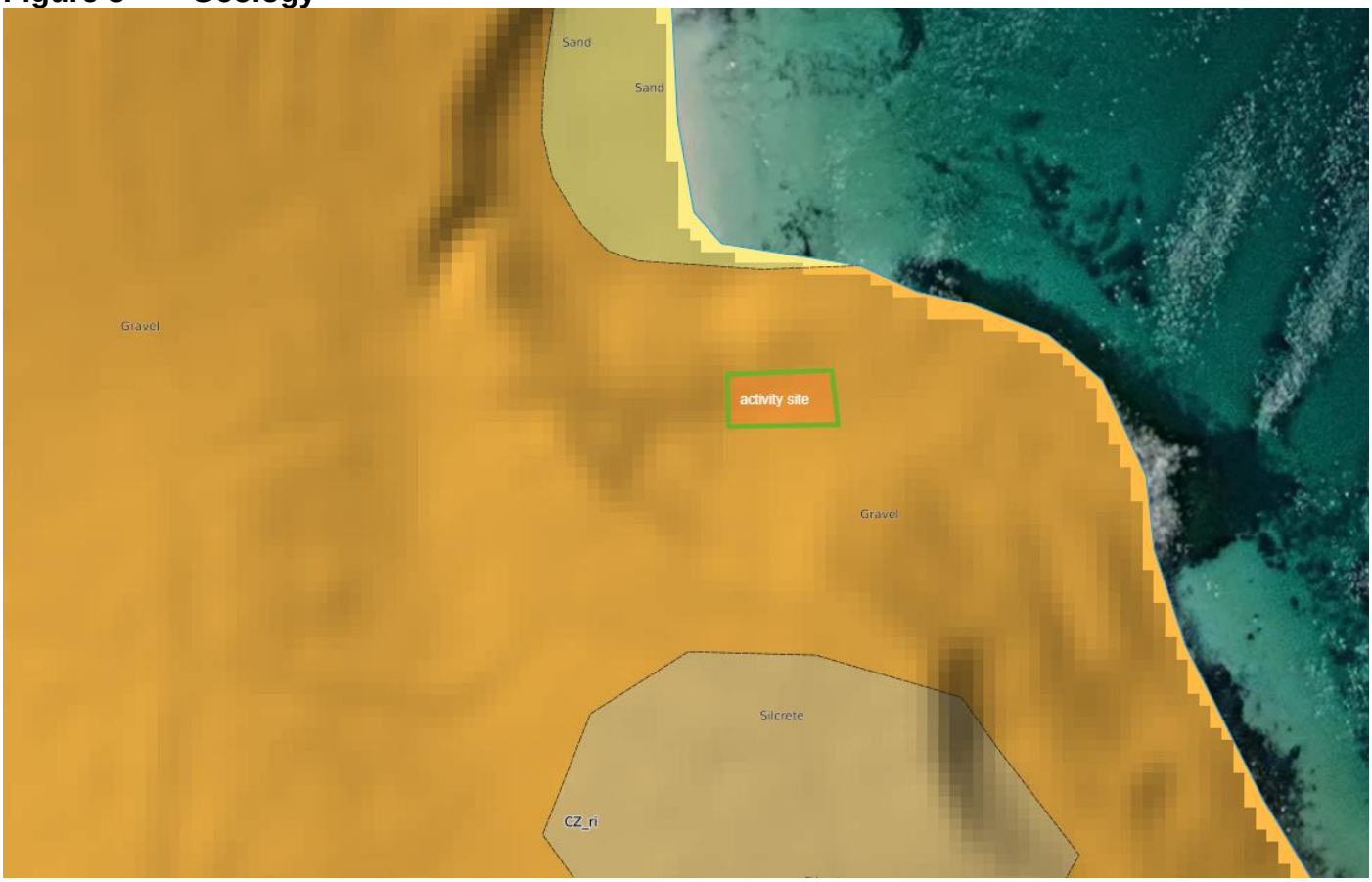

https://minview.geoscience.nsw.gov.au/#/?lon=150.4722&lat=-35.31734&z=19&bm=bm1&l=ge611:n:100,ge610:n:100,ge69:n:100,ge68:n:100,ge67:n:100,ge66:n:100,ge65:n:100,ge64:n:100,ge63:n:100,ge62:n:100,ge61:n:100,ge612:y:100,hi1:n:25,wa1:y:100,ut1:n:50,ad0:y:100

2.3 Memorial plaque

The proposed activity would require the removal and relocation of an existing bench seat at the site of the viewing platform. A memorial plaque has been installed on seat which reads "*For Al who loved this beach. From Yvonne who always sat beside him. In loving memory of Al Emery 17th May 1936 – 18th September 2015*" (refer to Photo 4 in Section 2.7 below).

There are no records of this seat being sponsored by the owner of the memorial plaque. The SCC Officer currently responsible for this program suggests that since the plaque doesn't look like the standard plaque SCC installs, there is a possibility the plaque may have been installed without SCC approval. Regardless, the Plaques and Memorial Policy (PO19/70) states

> *"Council does not guarantee to retain plaques and memorials in perpetuity. Generally, a plaque or memorial will be retained in place for as long as practicable, with the following exceptions:*
>
> - *the area in which the item is sited is to be redeveloped; or*
> - *ongoing maintenance costs are prohibitive; or*
> - *in the case of a plaque, the asset to which it is attached has reached the end of its useful life; or*
> - *the condition of the plaque or memorial is poor.*
>
> *If a plaque or memorial is removed for any of the reasons above, Council will not guarantee replacement of the plaque or memorial, however replacement plaques or memorials of similar or different style or form may be considered. All reasonable efforts will be made to identify, contact and advise relevant stakeholders (including family members)."*

In accordance with the Policy, SCC will retain the plaque and make efforts to contact and advise family members. This is reflected in the prescribed environmental impact mitigation measures in Section 7 of this REF.

2.4 Shoalhaven Water Infrastructure

The proposed activity would be undertaken above sewer gravity mains and a sewer rising main and will require the modification of a manhole (Figure 4 below). Prior to commencement of works, Shoalhaven Water shall be engaged to determine any design or construction methodology requirements.

Figure 4 Sewerage Infrastructure

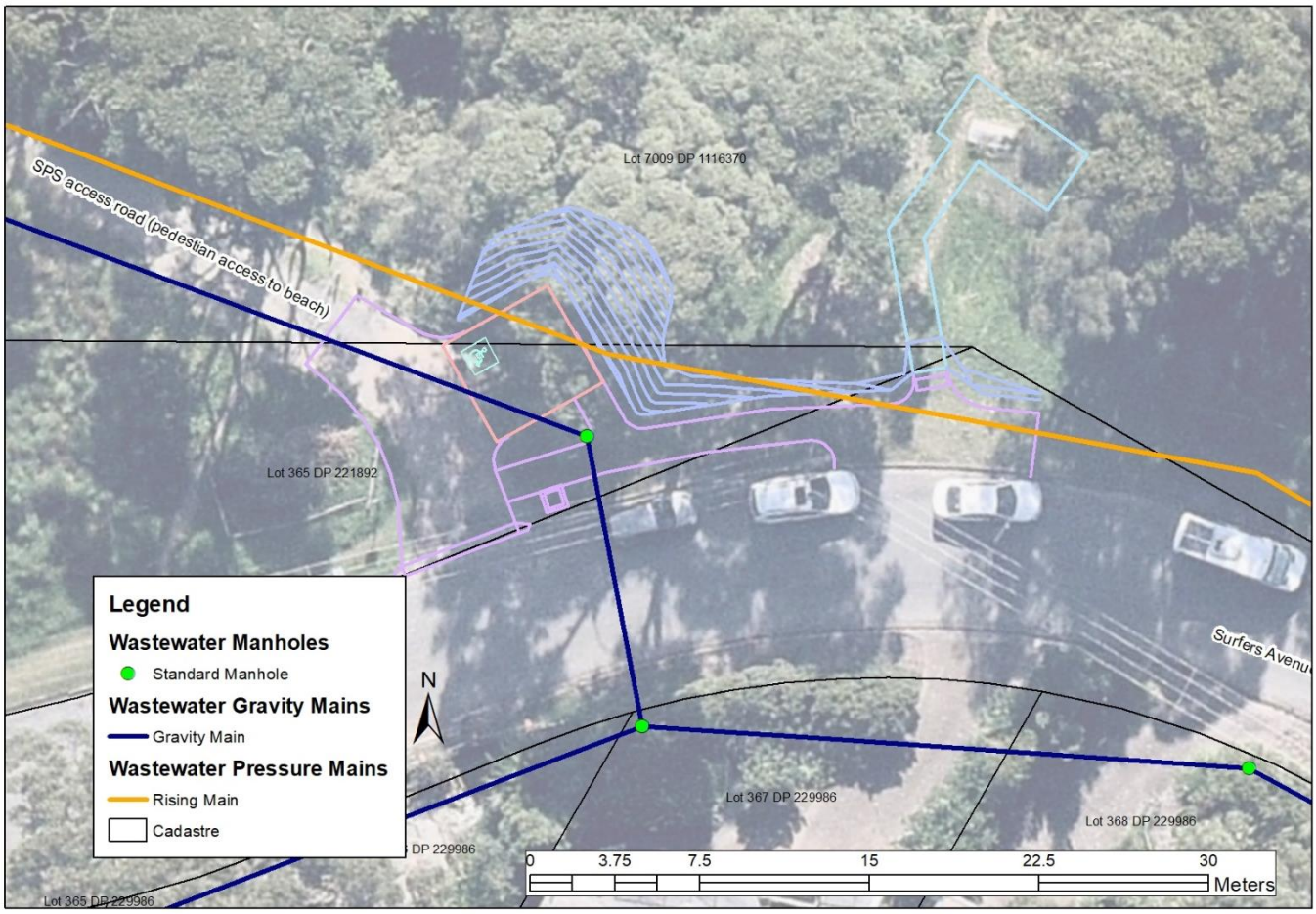

2.5 Coastal Hazards and Slope Instability

The site, for the purposes of the Shoalhaven Local Environmental Plan 2014 (SLEP 2014), has been mapped as “Beach Erosion/Oceanic Inundation” and “Coastal Hazards Area” (Figure 5 below). The proposed activity is unlikely to affect the evacuation of land in an emergency and is unlikely to increase the severity of coastal hazards of nearby properties.

The geotechnical assessment conducted by Douglas Partners (2002) examined slope instability and coastal hazards associated with the proposed activity site. They report that there has been slope instability upslope of the site with the site within the boundary of potential slip zones. Key stability and coastal hazard issues were identified as:

- *“Slow, ongoing erosion of clay soils in the toe of the coastal slope due to normal coastal processes for current conditions and storm events.*
- *If predicted sea level rises are realised, clay soils in the coastal slope will potentially be subject to increased storm waves and swell and saturation from rainfall events, increasing the risk level and rate of erosion which may result in loss of future support. Accordingly, such effects must be considered by the engineering design.*
- *Possible slow soil creep within ‘Slip Zone 3’, of which the proposed viewing platform site is near the toe. This could potentially be increased if loss or support of the toe is realised due to coastal erosion.*”

Douglas Partners (2022) made a number of recommendations for hazard reduction and precautionary works, earth works, site preparation, foundations for the viewing platform, and in relation to the carpark. The recommendations relating to construction have been incorporated into the Structural Design for the proposed activity (Appendix A).

Figure 5 Coastal Risk Planning

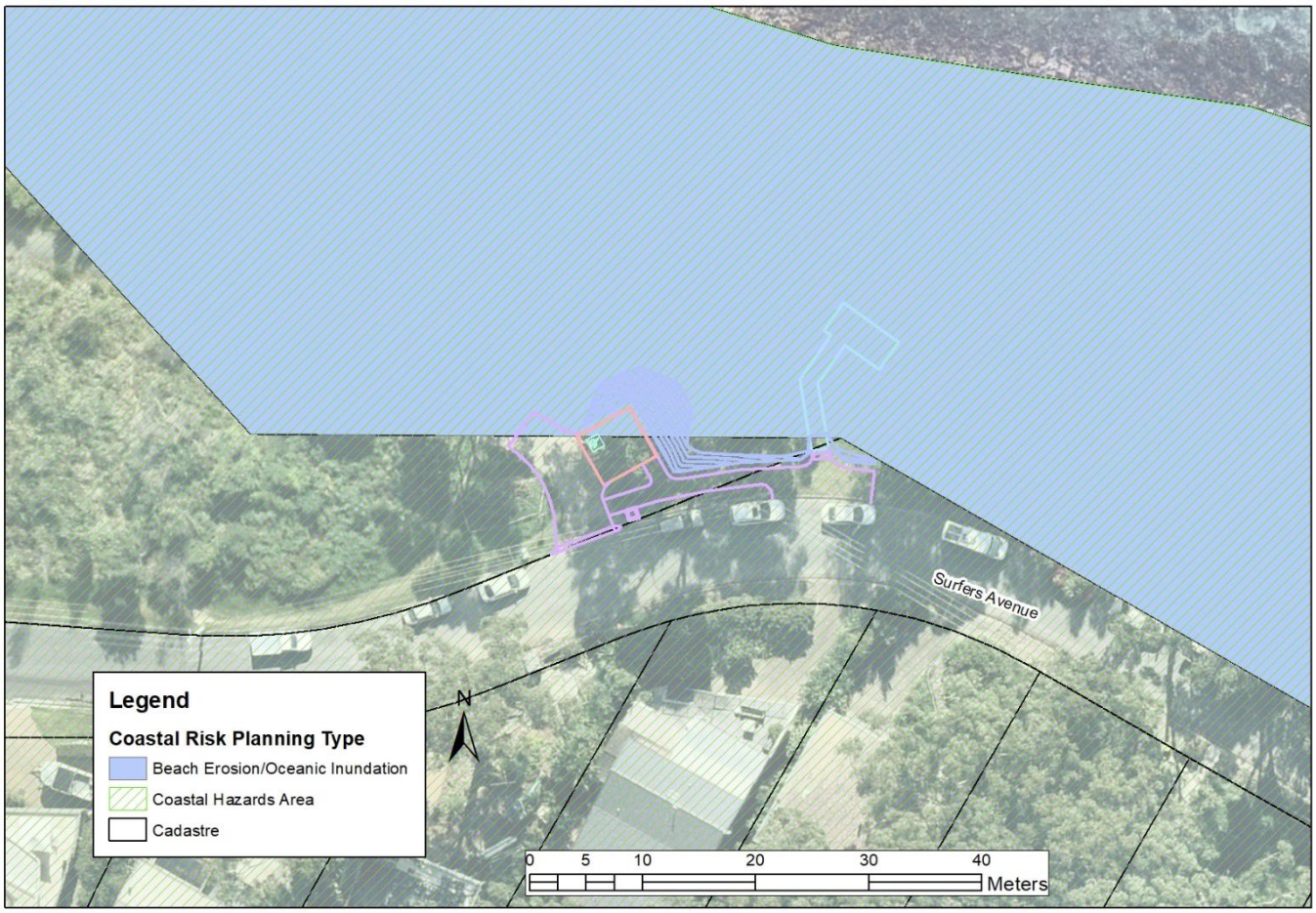

2.6 Other

With relevance to the proposed activity, the site:

- is not mapped as being contaminated (SCC GIS Enquiry)
- is not mapped as having potential for acid sulfate soils (SCC GIS Enquiry)
- is subject of an unresolved Aboriginal Land Rights Claim (only Lot 7009 DP 1116370)
- is not mapped as flood prone
- does not contain riparian areas and will not extend below the mean high water mark
- is mapped as having “High Environmental Value” in the Illawarra Shoalhaven Regional Plan 2014 https://www.planning.nsw.gov.au/-/media/Files/DPE/Plans-and-policies/Plans-for-your-area/Regional-plans/Illawarra-Shoalhaven-Regional-Plan-05-21.pdf
- does not contain/comprise littoral rainforest or coastal wetlands and is not mapped as such for the purposes of the *State Environmental Planning Policy (Resilience and Hazards) 2021.*

- is mapped in SCC GIS Enquiry as the endangered ecological community, Bangalay Sand Forest but this is incorrect (refer to Section 2.1 above)
- is zoned RE1 Public Recreation in the Shoalhaven Local Environmental Plan 2014 (SLEP 2014). The proposed activity is consistent with the objectives of the zone: "*to enable land to be used for public open space or recreational purposes", "to provide a range of recreational settings and activities and compatible land uses",* and "*to protect and enhance the natural environment for recreational purposes.*
- is listed in the Environmental Heritage Schedules of the SLEP 2014 as Item 324 – Silica Wharf and Tramway (remnants) however no material remnants are evident at the site (refer to Section 3.5 of this REF for more information).

2.7 Photos

Photo 1: Location of the proposed viewing platform (at the location of the bench seat)

Photo 2: Approximate location of the proposed carpark and associated filling and battering. Also shows the SPS track utilised by people accessing the beach.

Photo 3: Soil exposure at the foreshore near the proposed activity area comprising gravel and clay deposits. No deposits of sand or visible shell midden lens

Photo 4: Plaque on the existing seat which would be relocated. If possible, the plaque will be removed and given back to the family.

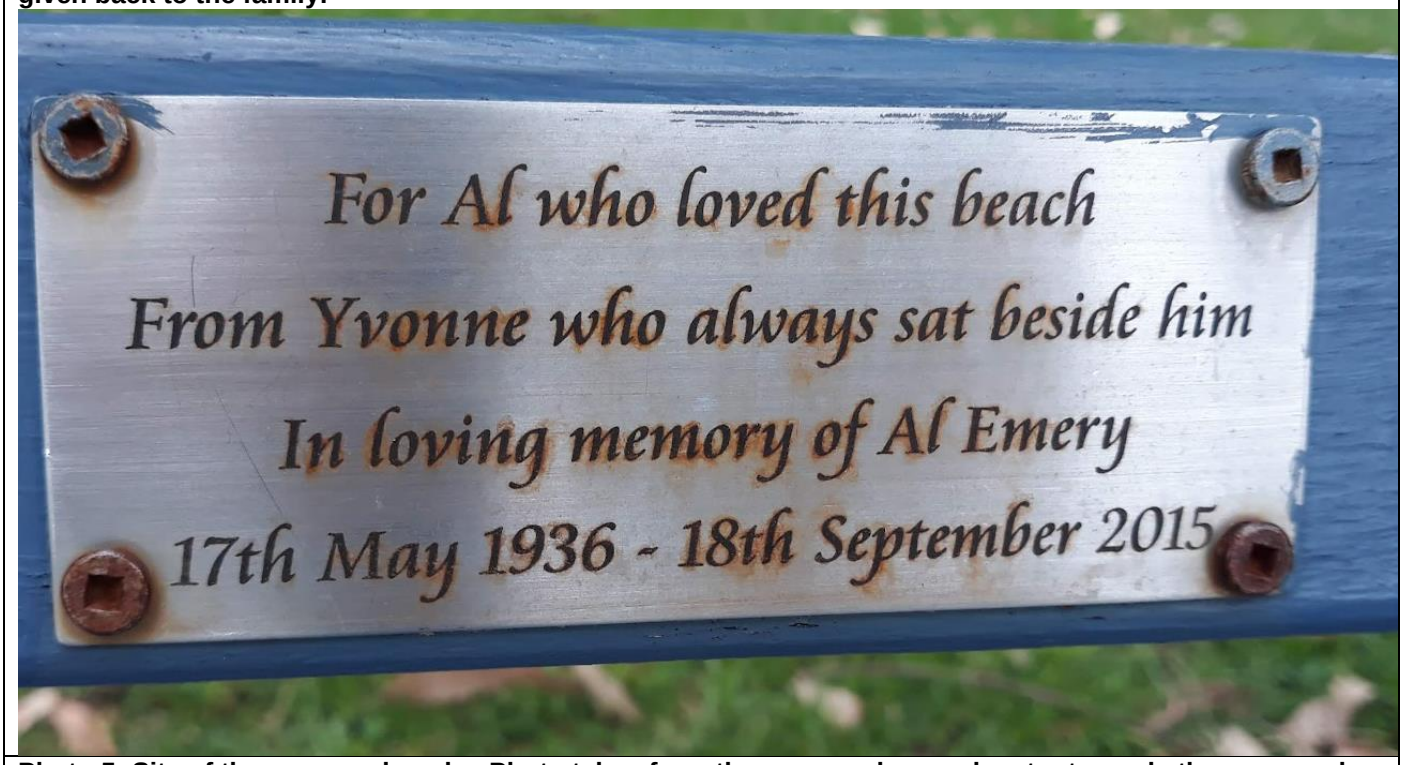

Photo 5: Site of the proposed works. Photo taken from the proposed carpark entry towards the proposed viewing platform (where the bench seat is currently located).

Photo 6: Area of vegetation that will partly be impacted on by the proposed accessible carpark and associated batter

Photo 7: Existing access road, gate and bollards – to be modified to provide for the proposed accessible carpark

3. ASSESSMENT OF LIKELY IMPACTS ON THE ENVIRONMENT

3.1 Impacts associated with the proposed activity

The proposed activity would involve the removal of vegetation in an area of approximate 63m^2 (Figure 6). Other potential impacts on the environment, including indirect impacts have been considered, including:

- threatened species
- heritage
- construction noise
- recreational obstructions

Each of these is discussed below.

Figure 6 Vegetation Removal

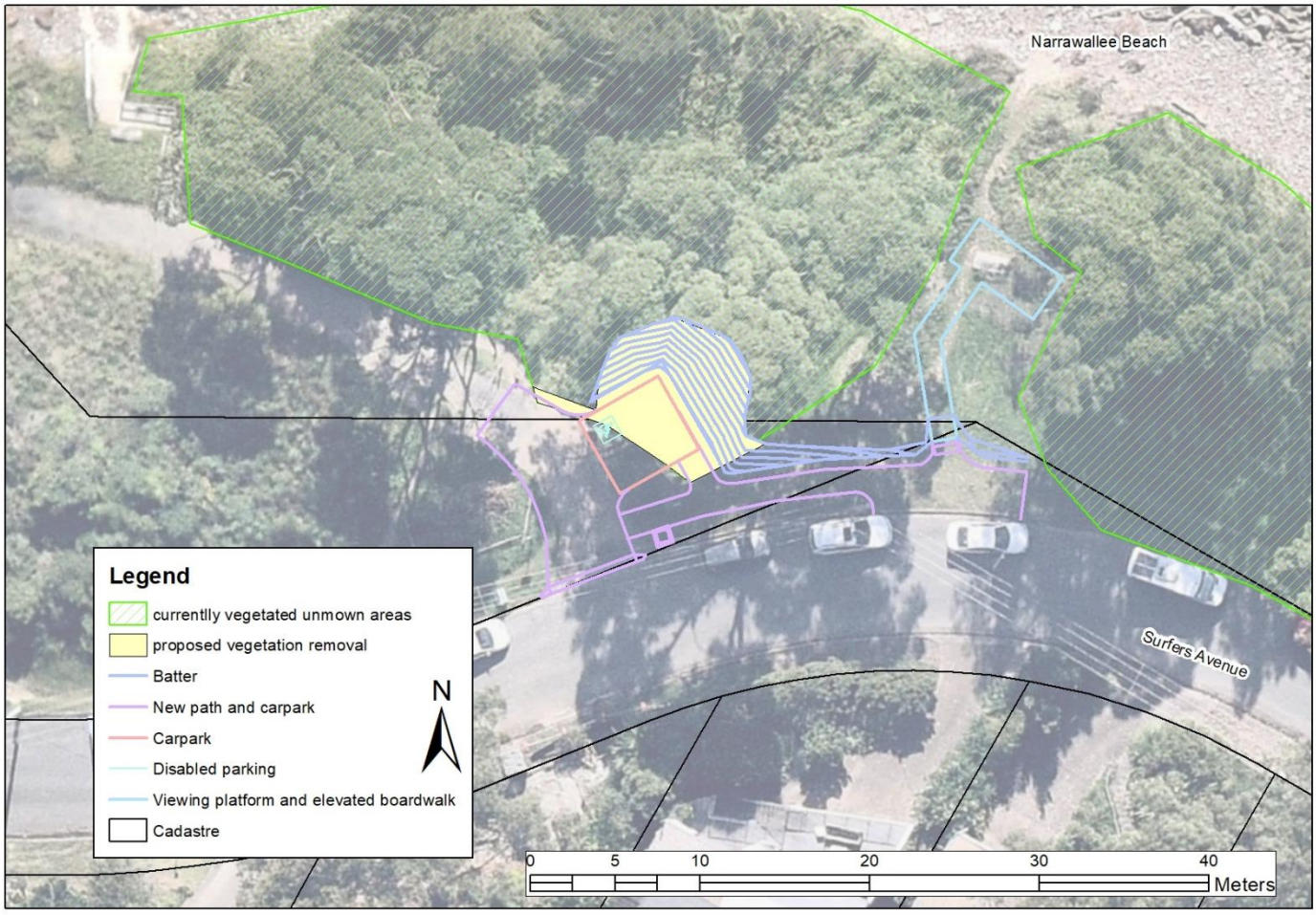

3.2 Vegetation Removal

Most of the 63m^2 unmown vegetated area comprises the environmental weed Montbretia (refer to Photos in Section 2.7 of this REF). Montbretia grows in dense clumps and can outcompete native plants. Control of this weed is advisable prior to commencement of works. The optimal timing for foliar spraying is between flowering and fruiting (summer) utilising glyphosate 360g/L at 1L per 50L of water (off-label permit 9907). As the plant spreads through underground bulbs, any excavated

material should be disposed of at a licenced waste facility not taken to another site or deposited nearby.

The clearing will also result in the loss of a several *Lomandra longifolia,* Sweet Pittosporum seedlings, and native raspberry. Lower limbs of a Swamp Oak may require removal. These species are common locally and state-wide. The environmental impact of vegetation clearing is not considered significant for the following reasons:

- None of the vegetation to be removed are listed in the threatened species schedules of the NSW *Biodiversity Conservation Act 2016* (NSW BC Act) or the Commonwealth *Environment Protection and Biodiversity Conservation Act 1999* (EPBC Act).
- Species listed in the threatened species schedules of the NSW BC Act and the EPBC Act are not likely to reside in this forest or rely on these trees and forest for food, refuge or breeding (refer to Section 3.3 of this REF).
- The vegetation is not in a vegetation community comprising an endangered ecological community listed under the NSW BC Act and EPBC Act.
- No hollow-bearing trees would be removed and no nests are currently visible.
- The site is not mapped on the Biodiversity Values Map administered for the purposes of the NSW *Biodiversity Conservation Act 2016.*
- The batters below the carpark will be revegetated with native species typically occurring in the area, *e.g. Lomandra longifolia,* Swamp Lily (this is reflected in the environmental impact mitigation measures prescribed in Section 7 of this REF).

The area is mapped on Terrestrial Biodiversity Map layer in the Shoalhaven Local Environment Plan (2014) and mapped as “High Environmental Value” or “Biodiversity Corridor” in the Illawarra Shoalhaven Regional Plan 2041 (https://www.planning.nsw.gov.au/-/media/Files/DPE/Plans-and-policies/Plans-for-your-area/Regional-plans/Illawarra-Shoalhaven-Regional-Plan-05-21.pdf). It is assumed, however, that this is because it has been mapped incorrectly as the EEC Bangalay Sand Forest. The vegetation may comprise similar species however it does not occur on sand.

An environmental impact statement (EIS) is therefore not considered warranted.

3.3 Threatened species impact assessment (NSW)

Section 1.7 of the EP&A Act 1979 applies the provisions of Part 7 of the NSW *Biodiversity Conservation Act 2016* and Part 7A of the *NSW Fisheries Management Act 1994* that relate to the operation of the Act in connection with the terrestrial and aquatic environment. Each are addressed below.

3.3.1 Part 7A *Fisheries Management Act 1994*

Part 7A relates to threatened species conservation. As the activity is not going to occur in a marine, estuarine, tidal or aquatic environment, no further consideration of Part 7A is warranted.

3.3.2 Part 7 *Biodiversity Conservation Act 2016*

An assessment of the potential for NSW threatened flora and fauna species occurring on-site or otherwise being impacted on by the proposed activity was undertaken (refer to Appendix B). The following threatened species or endangered ecological communities are known to occur on-site or are considered to have some potential to occur on-site or be otherwise impacted on by the proposed activity:

- White-bellied Sea-Eagle *Haliaeetus leucogastre* – Vulnerable

- Varied Sittella *Daphoenositta chrysoptera* – Vulnerable

Section 7.3 of the Act provides a 'five-part' test to determine whether a proposed development or activity is likely to significantly affect threatened species or ecological communities, or their habitats. Each Part is addressed below:

Part A - In the case of a threatened species, whether the proposed development or activity is likely to have an adverse effect on the lifecycle of the species such that a viable local population of the species is likely to be place at risk of extinction.

<u>White-bellied Sea-Eagle</u>

The White-bellied Sea-eagle is distributed around the Australian coastline including Tasmania, and well inland along rivers and wetlands of the Murray Darling Basin. In NSW it is widespread along the east coast and all major inland rivers and waterways.

Habitats are characterised by the presence of large areas of open water including larger rivers, swamps, lakes, and the sea. It occurs at sites near the sea or sea-shore, such as around bays and inlets, beaches, reefs, lagoons, estuaries and mangrove; and at, or in the vicinity of freshwater swamps, lakes, reservoirs, billabongs, and saltmarsh. Terrestrial habitats include coastal dunes, tidal flats, grassland, heathland, woodland, and forest (including rainforest).

Breeding habitat consists of mature tall open forest, open forest, tall woodland, and swamp sclerophyll forest close to foraging habitat. Nest trees are typically large emergent eucalypts and often have emergent dead branches or large dead trees nearby which are used as 'guard roosts'. Nests are large structures built from sticks and lined with leaves or grass.

Although the species is likely to be at the site from time to time, the proposed activity is unlikely to have an adverse effect on the lifecycle of the species such that a viable local population of the species is likely to be place at risk of extinction for the following reasons:

- The site does not comprise breeding habitat as there are no nests present and the site is too urbanised and not conducive to breeding.
- The removal of 63m^2 of vegetation, mainly Montbretia would have no effect on breeding or food resources

A species impact statement (SIS) or entry into the Biodiversity Offset Scheme (BOS) is therefore not required for this part and species.

<u>Varied Sittella</u>

The Varied Sittella inhabits eucalypt forests and woodlands, especially those containing rough-barked species and mature smooth-barked gums with dead branches, mallee and Acacia woodland. The species feeds on arthropods gleaned from crevices in rough or decorticating bark, dead branches, standing dead trees and small branches and twigs in the tree canopy, and builds a cup-shaped nest of plant fibres and cobwebs in an upright tree fork high in the living tree canopy, often re-using the same fork or tree in successive years (OEH 2017).

Although the site comprises potential habitat, the proposed activity is unlikely to have an adverse effect on the lifecycle of the species such that a viable local population of the species is likely to be place at risk of extinction for the following reasons:

- A local population is not known for the site.
- There are no nests present.

- The removal of 63m^2 of mainly Montbretia would have no effect on breeding or food resources.

A species impact statement (SIS) or entry into the Biodiversity Offset Scheme (BOS) is therefore not required for this part and species.

Part B - In the case of an endangered ecological community or critically endangered ecological community, whether the proposed development or activity:

(i) is likely to have an adverse effect on the extent of the ecological community such that its local occurrence is likely to be placed at risk of extinction, or
(ii) is likely to substantially and adversely modify the composition of the ecological community such that its local occurrence is likely to be placed at risk of extinction

The proposed activity would not be undertaken on or affect an endangered ecological community. The vegetation community at and near the site does not comprise the Bangalay Sand Forest EEC. A species impact statement (SIS) or entry into the Biodiversity Offset Scheme is therefore not required.

Part C - In relation to the habitat of a threatened species or ecological community:

(iii)the extent to which habitat is likely to be removed or modified as a result of the proposed development or activity

(iv)whether an area of habitat is likely to become fragmented or isolated from other areas of habitat as a result of the proposed development or activity, and
(v) the importance of the habitat to be removed, modified, fragmented or isolated to the long-term survival of the species or ecological community in the locality.

No important habitat for threatened species would be removed or otherwise significantly impacted (see Part A).

No EEC would not be fragmented or isolated, nor removed or modified to an extent that would affect the long-term survival of the EEC occurring in the locality (refer to Part B).

The proposed activity will therefore not affect the long-term survival of any threatened species or endangered ecological community in the locality.

Part D – Whether the proposed development or activity is likely to have an adverse effect on any declared area of outstanding biodiversity value (either directly or indirectly).

No "*areas of outstanding biodiversity values"* have been declared in the City of Shoalhaven.

Part E – Whether the proposed development or activity is or is part of a key threatening process or is likely to increase the impact of a key threatening process.

The only key threatening process listed in the NSW *Biodiversity Conservation Act 2016* considered relevant to the proposed activity is *Clearing of Native Vegetation,* which is defined by the Scientific Committee's determination as "*the destruction of a sufficient proportion of one or more strata (layers) within a stand or stands of native vegetation so as to result in the loss, or long-term modification, of the structure, composition and ecological function of a stand or stands"* (OEH 2001d). Clearing of native vegetation has been shown to:

- cause widespread fragmentation of ecological communities
- reduce the viability of ecological communities by disrupting ecological functions
- result in the destruction of habitat and loss of biological diversity

- lead to soil and bank erosion, increased salinity and loss of productive land.

The proposed activity would involve the removal of approximately 63m^2 of mainly Montbretia mixed with a few native species. The impact of the proposed activity on a key threatening process, is not considered to be significant as only the lower strata of the forest in the 63m^2 area is likely to be affected and it is unlikely to lead to:

- exacerbation of fragmentation of vegetation
- destruction of habitat causing a loss of biological diversity and extinction of species or loss or local genotypes
- fragmentation of populations resulting in limited gene flow between small, isolated populations, reduced potential to adapt to environmental change and loss or severe modification of the interactions between species
- riparian zone degradation such as bank erosion leading to sedimentation that affects aquatic communities
- the establishment and spread or exotic species which may displace native species
- significant reduction of habitat for threatened species or ecological communities.

As a result, the proposed activity is considered not likely to result in the operation of, or significantly increase the impact of this key threatening process. A SIS or entry into the BOS is not required.

3.4 Indigenous heritage

Under Section 86 of the NSW National Parks and Wildlife Act 1974 (NPW Act) it is an offence to disturb, damage, destroy any Aboriginal object without an Aboriginal Heritage Impact Permit (AHIP). The Act, however, provides that if a person who exercises ‘due diligence’ in determining that their actions will not harm Aboriginal objects has a defence against prosecution if they later unknowingly harm and object without an AHIP (Section 87(2) of the Act). To effect this, the NSW Department of Environment, Climate Change and Water have prepared the Due Diligence Code of Practice for the Protection of Aboriginal Objects in New South Wales (hereafter referred to as the ‘Due Diligence Code’) to assist individuals and organisations to exercise due diligence when carrying out activities that may harm Aboriginal objects and to determine whether they should apply for an AHIP.

In accordance with Step 1 of the Due Diligence Code, a search on the Aboriginal Heritage Information Management System (AHIMS) indicated that there were no recorded Aboriginal heritage sites within the area (Figure 7 below).

Step 2 of the Due Diligence Guidelines then requires consideration of whether Aboriginal objects are likely to be in the area of the proposed activity with regard to certain landscape features, i.e.:

- within 200 metres of waters, or
- located in a sand dune system, or
- located on a ridge top, ridge line or headland, or
- located within 200 metres below or above a cliff face, or
- within 20 metres of or in a cave, rock shelter, or a cave mouth

The subject site does comprise such landforms (within 200 metres of waters). The presence of silcrete would also indicate a propensity for stone artefacts to be present. Consequently, an on-site inspection of the area was conducted on 17 June 2021 and again on 3 November 2022 for a search for any surface artefacts, or mounded areas that could comprise a shell midden, or a 'lens' of stratified cultural material within the exposed earth of the shoreline. Nothing was found in the area.

A literature search was conducted utilising Shoalhaven City Council's document archive and AHIMS. A report titled Milton / Ulladulla Sewerage Scheme Augmentation EIS – Cultural Heritage Component by Navin Officer Heritage Consultants in 2000 describes surveys undertaken in the vicinity of the proposed activity, i.e. for the nearby sewage pumping station and rising main. No Aboriginal cultural heritage sites were found by these archaeologists.

In consideration of the above, it is reasonable to conclude that there is a low probability of objects occurring in the area of the proposed activity. As a result, an AHIP is not required, and the works can proceed with caution. Refer to Section 7 for cautionary measures.

Figure 7 Results of AHIMS Aboriginal heritage search

AHIMS Web Services (AWS)
Search Result

Your Ref/PO Number : Surfers Ave. platform
Client Service ID : 733967

Shoalhaven City Council - Nowra
Date: 21 November 2022

PO Box 42 Bridge Rd
Nowra New South Wales 2541

Attention: Geoffrey Young

Email: geoff.young@shoalhaven.nsw.gov.au

Dear Sir or Madam:

AHIMS Web Service search for the following area at Datum :GDA, Zone : 56, Eastings : 270154.0 - 270282.0, Northings : 6088806.0 - 6088890.0 with a Buffer of 0 meters, conducted by Geoffrey Young on 21 November 2022.

The context area of your search is shown in the map below. Please note that the map does not accurately display the exact boundaries of the search as defined in the paragraph above. The map is to be used for general reference purposes only.

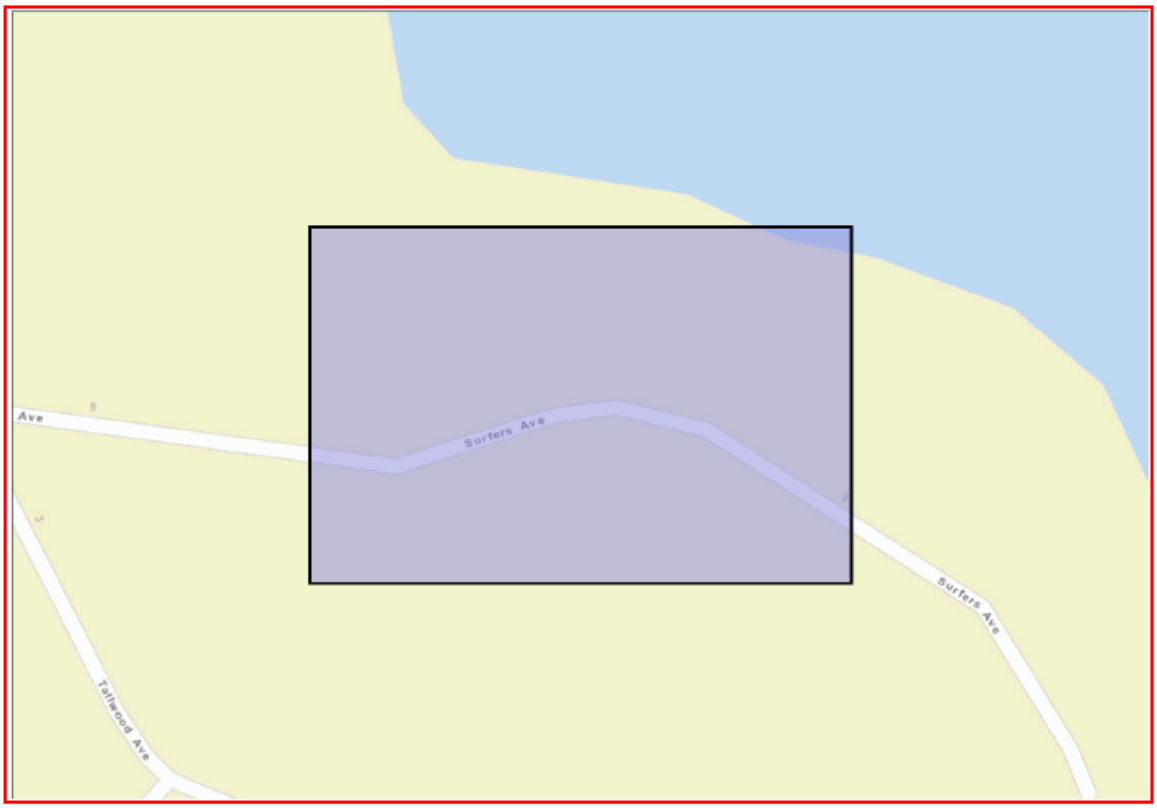

A search of Heritage NSW AHIMS Web Services (Aboriginal Heritage Information Management System) has shown that:

0	Aboriginal sites are recorded in or near the above location.
0	Aboriginal places have been declared in or near the above location. *

3.5 Non-indigenous heritage

No heritage items listed on the NSW State Heritage Inventory occur within or in proximity to the site. The entire lot, 7009 DP1116370, however is in the Environmental Heritage Schedule 5 of the Shoalhaven Local Environmental Plan 2014 (SLEP 2014). The lot contains the "Silica Wharf and Tramway (Remnants)". There is not much left of these items but include silica workings on Bannister Point, the remains of iron bark piles in Narrawallee Creek and embankments and drystone walling with the bridge abutments north of Narrawallee Creek. The tramway extended from Bannister Point to Pattimores Lagoon near Lake Conjola (Freeman 2003). There is, however, no material evidence of the tramway extant at the subject location.

The proposed activity would occur in a previously disturbed area and constitutes 'minor works' under *'Relics of local heritage significance: a guide for minor works with limited impact*' (Heritage NSW 2022). The proposed activity would not result in any direct impacts on heritage items or values. Works can be undertaken with caution under exception 2(b) made under s139(4) of the NSW *Heritage Act 1977*(refer to Section 4.5 of this REF).

3.6 Impacts on neighbouring residents

The proposed activity will be conducted in a residential area reasonably close to houses. Construction noise would be unavoidable but temporary in nature (~one to two months). Noise impact mitigation measures are to be implemented before and during construction. These include:

- Construction activities shall be limited to the hours shown in Table 1 below

Table 1 Construction hours

Construction hours	Monday to Friday	Saturday	Sunday and public holidays
Standard construction hours	7:00 am to 6:00 pm	8:00 am to 1:00 pm	No work[1]
Construction activities with impulsive or tonal noise emissions	8:00 am to 5:00 pm[2]	9:00 am to 1:00 pm[2]	No work[1]

[1] Emergency works to protect persons, property and the environment permitted.

[2] Works may be carried out in continuous blocks not exceeding three hours each with a minimum respite from those activities and works of not less than one hour between each block. 'Continuous' includes any period during which there is less than a one hour respite between ceasing and recommencing any or the work the subject of this condition.

- Owners and occupants of surrounding residential properties shall be consulted and informed of the dates of the intended works, sequencing and timing of noisy events. Where possible, this shall include an indicative noisy works schedule over a weekly period.
- Non-tonal reversing beepers (or equivalent mechanisms) shall be fitted and used on all construction vehicles and mobile plant regularly used on site.
- Stationary noise sources shall be enclosed or shielded where feasible.
- All employees, contractors and subcontractors shall receive an environmental / noise / vibration induction. The induction should at least include:
    - all project specific and relevant standard noise and vibration mitigation measures
    - permissible hours of work

- any limitations on high noise generating activities
- construction employee parking areas
- designated loading / unloading areas and procedures
- implementation of behaviour practices near dwellings, *e.g.:*
  - no swearing or unnecessary shouting or loud radios next to dwellings
  - no dropping of materials from height, throwing or metal items and slamming of doors.

All the above are included in the environmental impact mitigation measures listed in Section 7 of this REF.

3.7 Recreational impacts

Access to the beach from Surfers Avenue is via the Sewage Pumping Station access road off Surfers Avenue. This access is currently obstructed by a series of bollards and gate across the road flanked by open stormwater drains (refer to Photos in Section 2.7 of this REF). The proposed activity would utilise part of this access track for proposed accessible carpark and may exacerbate access obstructions and increase safety risks. To reduce the impacts on access and safety, it was suggested by the ultimate asset custodian (refer to Section 5.2) that the current design (Appendix A) be amended to improve access along the SPS access track in the vicinity of the proposed carpark, for example, by:

- replacing the gate with a removable and lockable bollard
- installing pits and pipes in the open stormwater drain to the west of the carpark and then filling-in the open drain.

These suggestions are included in the environmental impact mitigation measures prescribed in Section 7.

3.8 EP&A Regulation – Section 171 matters of consideration

Section 171(2) of the *Environmental Planning and Assessment Regulation 2021* lists the factors to be taken into account when consideration is being given to the likely impact of an activity on the environment under Part 5 of the EP&A Act. These matters are addressed in Table 3.

Table 2 Section 171(2) Matters of consideration

Does the proposed activity:	Assessment	Reason
a) Have any environmental impact on a community?	Positive	The proposed activity involves the construction of a new accessible viewing platform and associated elevated boardwalk, paths and carpark. The proposed activity would also be compliant with design for access and mobility standards (AS1428.1). Consideration will also be made to amending the design to improve access along the SPS access track in the vicinity of the proposed accessible carpark in conjunction with the proposed activity to reduce the impact of the

Does the proposed activity:	Assessment	Reason
		carpark on the beach access via the SPS access track (refer to Section 7 of this REF). The owners of the adjacent residential properties the contactor and project manager to minimise noise impacts. The proposed activity would not have any impact on other community services and infrastructure such as water, waste management, educational, medical or social services.
b) Cause any transformation of a locality?	Negligible	The locality would remain relatively unchanged with the exception of a small viewing platform instead of a grassy area and bench seat.
c) Have any environmental impact on the ecosystem of the locality?	Low-adverse	The five-part test of significance (Section 3.3) concludes that the proposed activity would not have a significant impact upon threatened species or endangered ecological communities. No hollow-bearing trees or food resources critical to the survival of a particular species would be removed. Aquatic ecosystems are not likely to be affected by the proposed activity and there is not likely to be any long-term or long-lasting impact on these through the input of sediment and nutrient into the ecosystem. Refer to prescribed environmental safeguards and mitigation measures prescribed in Section 7.
d) Cause a diminution of the aesthetic, recreational, scientific or other environmental quality or value of a locality?	Positive	Recreational values will be enhanced with the development of accessible infrastructure. In the context of the locality the visual impact of the proposed activity would be minimal. Scientific and environmental qualities of the site would not be affected. The proposed activity would have no impact on these values.
e) Have any effect on a locality, place or building having aesthetic, anthropological, archaeological, architectural, cultural, historical, scientific, or social significance or other special value for present or future generations?	Negligible	There is no material evidence of the silica tramway. The existing infrastructure (roads, parks, utilities) would have resulted in the demise of tramway materials. A heritage excavation permit is not required (refer to Section 4.5) In accordance with the NSW Department of Environment, Climate Change and Water's Due Diligence Code of Practice, the proposed activity does not require an Aboriginal Heritage Impact Permit as the activity is unlikely to harm an Aboriginal artefact (refer to Section 3.4 of this REF). The site is not within an Aboriginal Place declared under the *National Parks and Wildlife Act 1974.*

Does the proposed activity:	Assessment	Reason
		An unexpected finds protocol prescribed in Section 7 of this REF would be applied
f) Have any impact on the habitat of protected fauna (within the meaning of the Biodiversity Conservation Act 2016)?	Negligible	Some vegetation would be removed, however: • The five-part test of significance, provided in Section 3.3 above, concludes that the proposed activity would not have a significant impact upon threatened fauna. • Fauna habitat values are not considered to be limiting or important *i.e.* there are no food resources critical for particular species, rock outcrops, hollow-bearing trees, etc. • The vegetation removed is predominantly the environmental weed Montbretia. • The batter below the carpark will be revegetated with native, locally occurring species. The prescribed environmental safeguards and mitigation measures (Section 7) would mitigate indirect impacts on fauna and habitat including through control of sediment and prevention of inadvertent damage beyond what is necessary for the activity.
g) Cause any endangering of any species of animal, plant or other form of life, whether living on land, in water or in the air?	Negligible	The five-part test of significance, provided in Section 3.3 above, concludes that the proposed activity would not have a significant impact upon threatened fauna. There are no species likely to rely on the site of the proposed works to the extent that modification would put them further in danger. The prescribed environmental safeguards and mitigation measures (Section 7 of this REF) would minimise the risk of impact on resident fauna.
h) Have any long-term effects on the environment?	Negligible / potentially low-adverse	The proposed activity would not use hazardous substances or use or generate chemicals which may build up residues in the environment. Construction works would be relatively short term and the noise generated would occur during normal working hours. The possible impacts have been discussed in detail under Section 3. Refer also to the prescribed environmental safeguards and mitigation measures in Section 7.
i) Cause any degradation of the quality of the environment?	Negligible	Aquatic ecosystems are not likely to be affected by the proposed activity and there is not likely to be any long-term or long-lasting impact on these through the input of sediment and nutrient into the ecosystem.

Does the proposed activity:	Assessment	Reason
		The proposed activity would not intentionally introduce noxious weeds, vermin, or feral animals into the area or contaminate the soil. Environmental safeguards and mitigation measures (Section 7) would be employed to minimise risk of degradation of the quality of the environmental.
j) Cause any risk to the safety of the environment?	Negligible / potentially low-adverse but positive overall	The proposed activity would not involve hazardous wastes and would not lead to increased bushfire or landslip risks. The structural design has incorporated the recommendations made in the geotechnical assessment report (Douglas Partners 2022) in relation to slope stability and coastal hazards. With the implementation of the prescribed environmental safeguards and mitigation measures in Section 7, the activity would not adversely affect or exacerbate coastal hazard risks (refer also to Section 2.5 of this REF) information).
k) Cause any reduction in the range of beneficial uses of the environment?	Positive	The environment is currently used as for carparking, access to the beach and beach viewing area. The activity will enhance this use.
l) Cause any pollution of the environment?	Low-adverse	The proposed activity would involve a temporary and local increase in noise during the construction phase due to the use of machinery. However, this is not anticipated to negatively affect any sensitive receivers such as schools, childcare centres, and hospitals. Noise impact mitigation measures are prescribed in Section 7 of this REF. Sediment and erosion control in accordance with the Blue Book would be implemented to minimise movement of sediment into waterways. It is unlikely that the activity (including the environmental impact mitigation measures) would result in water or air pollution, spillages, dust, odours, vibration or radiation. The proposed activity does not involve the use, storage or transportation of hazardous substances or the generation of chemicals which may build up residues in the environment. Acid sulfate soils are not likely to occur. The risk of contamination and spills from machinery including fuel and hydraulic fluids would be minimised

Does the proposed activity:	Assessment	Reason
		through prescribed environmental safeguards and mitigation measures (Section 7 of this REF).
m) Have any environmental problems associated with the disposal of waste?	Negligible	The waste that would be generated during construction (soil and vegetation waste) could be re-used in accordance with resource recovery exemptions or taken to a licensed waste facility. There would be no trackable waste, hazardous waste, acid sulfate soils, liquid waste, or restricted solid waste as described in the NSW *Protection of the Environment Operations Act 1997*. If the montbretia areas area excavated, the soil would be disposed into a licenced waste facility to reduce the risk of translocation and spread of the weed.
n) Cause any increased demands on resources (natural or otherwise) which are, or are likely to become, in short supply?	Low-adverse	The amount of resources that would be used are not considered significant and would not increase demands on current resources such that they would become in short supply.
o) Have any cumulative environmental effect with other existing or likely future activities?	negligible	The assessed impacts of the proposed activity are not likely to interact to a degree which causes cumulative environmental affects. After the works are completed, other major works are not anticipated to interact directly with the proposed activity..
p) Any impact on coastal processes and coastal hazards, including those under projected climate change conditions	Potentially low-adverse	The structural design has incorporated the recommendations made in the geotechnical assessment report (Douglas Partners 2022) in relation to slope stability and coastal hazards.
q) Any applicable local strategic planning statement, regional strategic plan or district strategic plan made under Division 3.1 of the Act	Low-adverse	The proposed activity is consistent with the Shoalhaven 2040 planning statement particularly Planning Priority 2 – Delivering Infrastructure (https://doc.shoalhaven.nsw.gov.au/displaydoc.aspx?record=D20/437277) The proposed activity is consistent with the Illawarra Shoalhaven Regional Plan 2041 (https://www.planning.nsw.gov.au/-/media/Files/DPE/Plans-and-policies/Plans-for-your-area/Regional-plans/Illawarra-Shoalhaven-Regional-Plan-05-21.pdf) particularly Objective 28 – *Create*

Does the proposed activity:	Assessment	Reason
		connected and accessible walking and cycling networks. Although, the area is mapped as “High Environmental Value” or “Biodiversity Corridor” in the Illawarra Shoalhaven Regional Plan 2041, it is assumed that this is because it has been mapped incorrectly as the EEC Bangalay Sand Forest. The vegetation may comprise similar species however it does not occur on sand.
r) Any other relevant environmental factors	N/A	

4. PERMISSIBILITY

4.1 Environmental Planning & Assessment Act 1979

Section 4.1 (Development that does not need consent) of the *Environmental Planning and Assessment Act 1979* (EP&A Act) states that:

> *"If an environmental planning instrument provides that specified development may be carried out without the need for development consent, a person may carry the development out, in accordance with the instrument, on land to which the provision applies."*

In this regard, Section 2.73 of the *State Environmental Planning Policy (Transport and Infrastructure) 2021* (Transport and Infrastructure SEPP) provides that the following developments can be carried out as without development consent on a public reserve by or on behalf of Council:

> "*(a) development for any of the following purposes—*
>
> *(i)* roads, pedestrian pathways, *cycleways, single storey car parks, ticketing facilities, viewing platforms and pedestrian bridges,*
>
> *(ii) recreation areas and recreation facilities (outdoor), but not including grandstands,…"*

As the proposed activity does not require development consent, and as it constitutes an 'activity' for the purposes of Part 5 of the EP&A Act, being carried out by (or on behalf of) a public authority, environmental assessment under Part 5 of the EP&A Act is required. This REF provides this assessment and ensures that Council as determining authority in consideration of the activity, meets its obligation under s5.5 of the EP&A Act, to examine and take into account to the fullest extent possible, all matters affecting or likely to affect the environment by reason of the activity.

4.2 NSW Crown Land Management 2016

SCC is the appointed Crown Land Manager for the crown reserve (R91246 – Narrawallee Beach) covering Lot 7009 DP 1116370. Section 3.21 of the *Crown Land Management Act 2016* provides that:

> *"(1) A council manager is authorised to classify and manage its dedicated or reserved Crown Land as if it were public land within the meaning of the Local Government Act 1993, subject to this Division.*
> *(2) Accordingly, a council manager is also authorised to manage its dedicated or reserved Crown Land as if it were community land or operational land, but only as permitted by this Division"*

Section 35 of the NSW Local Government Act specifies that community land must be used and managed in accordance with the plan of management applying to the reserve. The plan of management that is likely to apply to the land would be the *Generic Community Land Plan of Management – Parks (*https://doc.shoalhaven.nsw.gov.au/displaydoc.aspx?record=D11/116070*).*

The proposed activity is considered consistent with the plan of management as it contributes to meeting the core objective "*to encourage, promote and facilitate recreational, cultural, social and educational pastimes and activities"* and "*to provide for passive recreational activities or pastimes and for the casual playing of games"* and "*to improve the land in such a way as to promote and facilitate its use to achieve the other core objectives for its management".* The proposed activity is also consistent with the POM as it meets SCC's stated commitment to develop high quality recreation facilities and also to upgrading and enhancing existing parks (section 3.2.5 of the POM). The proposed activity therefore complies with the Act and no further consideration is required.

4.3 NSW Local Government Act 1993

The part of the activity to be undertaken on Lot 365 DP 221892 would occur on Community Land, categorised as 'park'. Under Section 35 of the Local Government Act specifies that community land must be used and managed in accordance with the plan of management applying to the reserve. The plan of management that is likely to apply to the land would be the *Generic Community Land Plan of Management – Parks* (https://doc.shoalhaven.nsw.gov.au/displaydoc.aspx?record=D11/116070).

The proposed activity is considered consistent with the plan of management as it contributes to meeting the core objective "*to encourage, promote and facilitate recreational, cultural, social and educational pastimes and activities"* and "*to provide for passive recreational activities or pastimes and for the casual playing of games"* and " *to improve the land in such a way as to promote and facilitate its use to achieve the other core objectives for its management".* The proposed activity is also consistent with the POM as it meets SCC's stated commitment to develop high quality recreation facilities and also to upgrading and enhancing existing parks (section 3.2.5 of the POM). The proposed activity therefore complies with the Act and no further consideration is required

4.4 NSW Aboriginal Land Rights Act 1983

Lot 7009 DP 1116370 is the subject of two separate Aboriginal land claims, ALC 26709 lodged on the 3 August 2010 and again as part of the 2017 'multiple and blanket' claims. These claims were made prior to the proposed activity being considered. As such the land remains 'claimable land' as defined in the Act.

Although the Act does not preclude the proposed activity, structures, facilities, public works etc constructed after the claims were made could become property of the claimants if successful. SCC must take this into consideration prior to construction of the proposed activity.

4.5 NSW Heritage Act 1977

Lot 7009 DP1116370 is in the Environmental Heritage Schedule 5 in the Shoalhaven Local Environmental Plan 2014 (SLEP 2014). The lot contains the "Silica Wharf and Tramway (Remnants)". There is not much left of these items but include silica workings on Bannister Point, remains of iron bark piles in Narrawallee Creek and embankments and drystone walling with the bridge abutments north of Narrawallee Creek. The tramway extended from Bannister Point to Pattimores Lagoon near Lake Conjola (Freeman 2003) and may have utilised the area of the proposed activity.

Under Section 139(1) of the NSW *Heritage Act 1977, "a person must not disturb or excavate any land knowing or having reasonable cause to suspect that the disturbance or excavation will or is likely to result in a relic being discovered, exposed, moved, damaged or destroyed unless the disturbance or excavation is carried out in accordance with an excavation permit."* Section 139(4) however allows for the granting of exceptions. Gazetted Exception 2(b) provides an exception from the requirement to hold an excavation permit for:

> "*any disturbance or excavation of land that constitutes minor works involving limited impact to relics or local heritage significance, within the meaning of the '<u>Relics of local heritage significance: a guide for minor works with limited impact'</u> published by Heritage NSW."*

The proposed activity is compliant with the Heritage NSW Guideline (Heritage NSW 2022) as:

- The site is not of State heritage significance.

- The proposed activity is 'minor works' as defined in the Guideline as:
  - there is no material evidence of the tramway extant at the subject location.
  - The environmental impact is relatively small relative to the potential area that would have been taken up by the silica operations
  - the site has been disturbed already by the construction of Surfers Avenue, residential development, and the stormwater and sewer management utilities

As the proposed activity would occur in a previously disturbed area and constitutes 'minor works' under the Guideline (Heritage NSW 2022), works can be undertaken with caution under Gazetted exception 2(b) made under s139(4) of the NSW Heritage Act 1977. Unexpected finds procedure is provided in the environmental mitigation measures prescribed in Section 7.

4.6 NSW Biodiversity Conservation Act 2016

The proposed development complies with the *Biodiversity Conservation Act 2016* (BC Act) for the following reasons:

- The proposed activity is unlikely to have a significant impact on threatened species and/or threatened ecological communities listed in the schedules of the Act. There is, therefore, no requirement to 'opt in' to the Biodiversity Offset Scheme.
- The design and mitigation measures (Section 7) would ensure that no *serious and irreversible impacts on biodiversity values* (as defined by the BC Act) occur at the site of the proposed activity.
- The proposed activity is not within an area declared to be of "outstanding biodiversity value" as defined in the Act and Regulations.

Because of the above considerations, neither a species impact statement nor a biodiversity development assessment report for entry into the Biodiversity Offset Scheme is required for the proposed activity.

It is also a defence to a prosecution for an offence under Part 2 of the Act (harming animals, picking plants, damaging the habitat of threatened species or ecological communities *etc*) if the work was essential for the carrying out of an activity by a determining authority within the meaning of Part 5 of the *Environmental Planning and Assessment Act 1979* after compliance with that Part.

The activity will not remove vegetation that is listed under Schedule 1 Threatened Species, Schedule 2 Threatened ecological communities and Schedule 6 Protected Plants. Therefore the activity is considered permissible as this REF has been prepared and determined in accordance with the EP&A Act. Refer to Section 3.2 for more information.

4.7 Commonwealth *Native Title Act 1993*

It can be assumed that native title has been extinguished as a *Previous Exclusive Possession Act* over Surfers Avenue road reserve and Lot 365 DP 221892 (freehold land owned by SCC).

The proposed works on Lot 7009 DP 116370 (crown land reserve) would affect native title. The applicable Future Act option was determined to be provided by Subdivision J (Reserves/Leased Land) for the following reasons:

- The subject reserve was gazetted for public recreation on 8 September 1978 prior to the commencement of the *Native Title Act 1993* (refer to extracts below).
- SCC is the appointed Crown Land Manager.
- The works would be undertaken in good faith under, and consistent with, the reserve's purpose (public recreation).
- The viewing platform and associated ramp and path are regarded as a "public work" (*i.e.* a structure that is a fixture).

Consequently, a 'future act' assessment was submitted to SCC's Native Title Manager on the 18 June 2021 (D21/251049). A referral to NTSCORP, who represent The South Coast People Native Title claimants, was submitted on 4 August 2021 (D21/327019). After the 28-day referral period was completed, a "notice of intent to commence work" was subsequently sent to NTSCORP on the 3 September 2021 (D21/380394). Native Title processes are therefore complete, and the proposed activity can commence as a 'valid' act.

(7663) Sydney, 8th September, 1978.

RESERVES FROM SALE

IN pursuance of the provisions of section 28, Crown Lands Consolidation Act, 1913, I declare that the Crown lands described hereunder shall be reserved from sale for the public purposes specified and are reserved accordingly.

W. F. CRABTREE, Minister for Lands.

FOR PUBLIC RECREATION

Land District—Nowra; Shire—Shoalhaven

No. 91246, Parish Ulladulla, County St Vincent, about 9.2 hectares, being the reservation 30.48 metres wide adjoining portion 3, and the part of the reservation 30.48 metres wide adjoining portion 4, extending generally easterly and southerly from the northerly prolongation of the western boundary of lot 260, D.P. 217167. L.B. 71-6415, Nowra.

4.8 Other

A summary of other relevant legislation and permissibility is provided in Table 3 below.

Table 3 Summary of other relevant legislation and permissibility

NSW STATE LEGISLATION
Shoalhaven Local Environmental Plan 2014 (SLEP)
Permissible √ Not permissible ☐

Under the SLEP the proposed activity may have required development consent. The provisions of Transport and Infrastructure SEPP however, prevail over the SLEP where there is an inconsistency by virtue of Section 3.28 of the EP&A Act. Consequently, development consent is not required.

State Environmental Planning Policy (Resilience and Hazards) 2021

Permissible √ Not permissible ☐

- The site is mapped as Coastal Use Area and Coastal Environment Area for the purpose of the SEPP. The development controls relevant to these mapped areas do not apply to development that can be carried out without consent.
- There are no areas mapped by this SEPP as coastal wetlands, littoral rainforest and coastal vulnerability areas in the proposed activity area.

NSW Fisheries Management Act 1994

Permissible √ Not permissible ☐

Justification:

the proposed activity:

- would not involve dredging for reclamation of waterland and or key fish habitat (Section 200 of the Act);
- would not affect declared aquatic reserves (Part 7, Division 2 of the Act);
- would not involve blocking the passage of fish (s.219);
- would not impact mangroves and marine vegetation (Part 7, Division 4);
- would not involve disturbance to gravel beds where salmon or trout spawn (s.208 of the Act);
- does not involve the release of live fish (Part 7, Division 7);
- does not involve the construction of dams and weirs (s.218);
- would not result in the blocking of the passage of fish;
- would not impact declared threatened species of endangered ecological communities (Part 7A);
- does not constitute a declared key threatening process (Part 7A); and
- would not use explosives in a watercourse (Clauses 70 and 71 of the *Fisheries Management (General) Regulation 2019).*

Local Land Services Act 2013

Permissible √ Not permissible ☐

Justification:

Any clearing of vegetation would be of a kind authorised under Section 60O(b)(ii) of the Local Land Services Act 2016 (“an activity carried out by a determining authority within the meaning of Part 5 of the Act after compliance with that Part.”). No separate authorisation under the Act is required.

Wilderness Act 1987
Permissible √ Not permissible ☐
The proposed activity is not located within a wilderness area declared under this Act.
Roads Act 1993
Permissible √ Not permissible ☐
Justification: • Section 71 provides that a roads authority can carry out road work on any public road for which it is the roads authority. SCC is the roads authority for Surfers Avenue. • Surfers Avenue is not a "classified road" to which Section 75 (*Public authorities to notify TfNSW of proposal to carry out road work on classified roads)* applies.
Protection of the Environment Operations Act 1997
Permissible √ Not permissible ☐
The proposed activity does not constitute scheduled development work or scheduled activities as listed in Schedule 1 of the Act. The proposed activity therefore does not require an environmental protection licence.
***National Parks and Wildlife Act 1974* (NP&W Act)**
Permissible √ Not permissible ☐
• The proposed activity would not encroach into National Park estate. • The Act provides the basis for the legal protection and management of Aboriginal sites in NSW. Under Sections 86 and 90 of the Act it is an offence to disturb an Aboriginal object or knowlingly destroy or damage, or cause the destruction or damage to, an Aboriginal object or place, except in accordance with a permit of consent under section 87 and 90 of the Act. • As there are no recorded sites or visible objects and as the site is on 'disturbed land', the Due Diligence Guidelines requires no further assessment as it is reasonable to conclude that there is a low probability of objects occurring in the area of the proposed activity and an AHIP is not required. Refer to Section 3.4 for more information.
Water Management Act 2000
Permissible √ Not permissible ☐
Local councils are exempt from s.91E(1) of the Act in relation to all controlled activites that they carry out in, on or under waterfront land by virtue of clause 41 of the *Water Management (General) Regulation 2018.* The proposed activity would not interfere with the aquifer and therefore an interference licence is not required (s.91F).

COMMONWEALTH LEGISLATION
Commonwealth *Environment Protection and Biodiversity Conservation Act 1999* (EP&BC Act)
Permissible √ Not permissible ☐
The proposed activity would not be undertaken on Commonwealth land and no matters of National Environmental Significance are likely to be significantly impacted on by the proposed activity. The proposed activity is therefore not a controlled action and does not require commonwealth referral.

5. CONSULTATION WITH GOVERNMENT AGENCIES

5.1 Transport & Infrastructure SEPP

Section 2.10 – Development with impacts on Council-related infrastructure or services

The proposed activity would be undertaken over sewer gravity and pressure rising mains managed by Shoalhaven Water. Prior to works, Shoalhaven Water shall be notified and any requirements they may have acknowledged and implemented.

If the work within the Surfers Avenue road reserve is undertaken by a contractor, a Section 138 (NSW *Roads Act 1993*) may be required from the relevant section of SCC.

These requirements are reflected in the prescribed environmental impact mitigation measures and safeguards in Section 7.

Section 2.11 – Development with impacts on local heritage

The proposed activity does not need to be referred to Shoalhaven City Council as it is unlikely to significantly impact on local heritage (refer to Section 3.5 of this REF).

Section 2.12 – Development with impacts on flood liable land

and

Section 2.13 – Consultation with State Emergency Service—development with impacts on flood liable land

The proposed activity would not be undertaken on flood liable land. Consultation with the listed prescribed entities is not required.

Section 2.14 – Development with impacts on certain land within the coastal zone

The proposed activity would not occur within a mapped coastal vulnerability area (as established under the State Environmental Planning Policy (Resilience and Hazards) 2021). Consultation with internal SCC staff is therefore not required.

Section 2.15 – Consultation with public authorities other than councils

In consideration of the consultation requirements specified under Section 2.15 of the Infrastructure SEPP, the proposed activity:

- would not be undertaken on adjacent to land reserved under the *National Parks and Wildlife Act 1974* or in Zone E1 or in equivalent zones.
- would not comprise a fixed or floating structure in or over navigable waters
- would not increase the amount of artificial light in the night sky and located on land within the dark sky region as identified on the dark sky region map
- would not be undertaken within Defence communications facility buffer (only relevant to the defence communications facility near Morundah)

- would not be undertaken on land in a mine subsidence district within the meaning of the *Mine Subsidence Compensation Act 1961*

Notification of the relevant prescribed agencies is therefore not required.

Section 2.16 – Consideration of Planning for Bush Fire Protection (PBP)

The proposed activity is not a type applicable to this clause *i.e.* health services facilities, correctional centres and residential accommodation. Consideration of PBP is therefore not required.

5.2 SCC Asset Custodian

Once constructed, the carparks, viewing platform, paths *etc* will be managed by City Services Southern District Engineer (as the asset custodian). Copies of plans were forwarded to the District Engineer on 21 November 2022. Comments were verbally received and related to the potential safety risks associated with transforming the sewer pumping station (SPS) access road, utilised by the public to access the beach, into the accessible carpark. There was also a concern that the carpark would exacerbate existing access obstructions (open stormwater drains, locked gate and bollards). It was suggested that the design is changed slightly to provide improved access along the SPS access track by:

- replacing the gate with a removable and lockable bollard
- installing pits and pipes in the open stormwater drain and then filling-in.

These suggestions are included in the environmental impact mitigation measures prescribed in Section 7.

6. COMMUNITY ENGAGEMENT

The proposed activity would be considered “local area” / “low impact” as described in SCC’s Community Engagement Policy (POL12/31). It is understood that letters were sent by the proponent to nearby residents in 2021 notifying of the proposed activity (D21/295925). It was reported that no responses were received. To remain consistent with the Community Engagement Policy it is recommended that as a minimum the following is also undertaken:

- Placement of project information on SCC’s Get Involved webpage
- Follow-up letters to residents with updated plans and construction timeframes.
- Letter/email to the relevant Community Consultative Body outlining the proposed activity and construction timeframes.

SCC shall also continually engage with neighbours over the course of the construction project to mitigate noise impacts.

These requirements are in the environmental impact mitigation measures and safeguards prescribed in Section 7.

7. ENVIRONMENTAL SAFEGUARDS AND MEASURES TO MINIMISE RISK OF ENVIRONMENTAL IMPACTS

Note that all environmental safeguards and measures are prescribed unless otherwise stated.

Safeguard / Measure	Responsibility
Detailed Design, works planning, approvals, consultation & notification	
1. The memorial plaque currently on the bench seat shall be kept and returned to the owner if requested.	SCC Project Manager
2. An appropriate traffic management plan shall be developed and implemented to minimise disruption and reduce risk of incident along Surfers Avenue during works.	Project Manager; Construction Contractor
3. To remain consistent with the Community Engagement Policy the following shall be undertaken: a. Placement of project information on SCC's Get Involved webpage. b. Follow-up letters to residents with updated plans and construction timeframes. c. Letter/email to the relevant Community Consultative Body outlining the proposed activity and construction timeframes. d. Letter / email to the Inclusion and Access Advisory Group to provide update of the proposed activity including construction timeframes	SCC Project Manager
4. If contractors are to be engaged to undertake the works, a Section 138 (Roads Act 1993) consent shall be sought from the SCC Roads Asset Manager.	Project Manager; Construction Contractor
5. Consideration should be made (i.e. recommendation) to amending the design to improve access along the SPS access track in the vicinity of the proposed accessible carpark *e.g.:* a. replacing the gate with a removable and lockable bollard b. installing pits and pipes in the open stormwater drain to the west of the carpark and then filling-in.	Project Manager; Contract Designer
6. Unless noted otherwise in the Structural Design Drawings all earthworks area to be in accordance with the geotechnical report by Douglas Partners (2022) - SCC document D23/20028.	Project Manager; Construction Contractor

Safeguard / Measure	Responsibility
7. Shoalhaven Water shall be engaged to determine any design or construction methodology for building over gravity and rising sewer mains and modifying manholes.	Project Manager; Construction Contractor
8. This REF must be published on the determining authority's (Council's) website or the NSW planning portal, in accordance with clause 171(4) EP&A Regulation 2021 as a matter of "public interest".	Environmental Officer
Site Establishment	
9. Treatment of Montbretia is recommended prior to commencement of earthworks for the carpark and batters. The optimal timing for foliar spraying is between flowering and fruiting (predominantly summer) utilising glyphosate 360g/L at 1L per 50L of water (off-label permit 9907). As the plant spreads through underground bulbs, any excavated material should be disposed of at a licenced waste facility and not taken to another site or deposited nearby.	SCC Project Manager; Construction Contractor
10. Machinery access, construction compound (if required), vehicles and stockpiles shall be located within existing cleared areas of the reserve and street.	Site Manager; Construction Contractor
11. All employees, contractors and subcontractors shall receive an environmental / noise / vibration induction. The induction should at least include: a. all project specific and relevant standard noise and vibration mitigation measures b. permissible hours of work c. any limitations on high noise generating activities d. construction employee parking areas e. designated loading / unloading areas and procedures f. implementation of behaviour practices near dwellings, e.g.: i. no swearing or unnecessary shouting or loud radios next to dwellings ii. no dropping of materials from height, throwing or metal items and slamming of doors.	Construction Contractor
12. Owners and occupants of nearby residential properties shall be consulted and informed of the dates of the intended works, sequencing and timing of noisy events. Where possible, this shall include an indicative noisy works schedule over a weekly period.	Site Manager; Construction Contractor
13. The contractor shall keep an emergency spill kit on-site at all times with procedures to contain and collect any leakage or spillage of fuels, oils and greases from plant and equipment.	Construction contractor

Safeguard / Measure	Responsibility
14. No major equipment maintenance works shall be undertaken on-site.	Construction contractor
15. To avoid the risk of pollution from machinery, refuelling shall generally be done off site, however if refuelling on site is required, due care shall be taken to avoid spilling fuel and a tray shall be used to catch any accidentally spilt fuel.	Construction contractor
16. Erosion and sediment controls in accordance with the 'Blue Book' (Landcom, 2004) shall be installed and maintained to prevent the entry of sediment into waterways. Erosion and sediment controls shall be maintained in good working order for the duration of the works and subsequently until the site has been stabilised and the risk of erosion is minimal.	Site Manager; Construction Contractor
Construction works	
17. Construction activities shall be limited to the hours shown below **Table 4 Construction hours** **Construction hours** / **Monday to Friday** / **Saturday** / **Sunday and public holidays** Standard construction hours / 7:00 am to 6:00 pm / 8:00 am to 1:00 pm / No work[1] Construction activities with impulsive or tonal noise emissions / 8:00 am to 5:00 pm[2] / 9:00 am to 1:00 pm[2] / No work[1] *[1] Emergency works to protect persons, property and the environment permitted.* *[2] Works may be carried out in continuous blocks not exceeding three hours each with a minimum respite from those activities and works of not less than one hour between each block. 'Continuous' includes any period during which there is less than a one hour respite between ceasing and recommencing any or the work the subject of this condition.*	Construction Contractor
18. Non-tonal reversing beepers (or equivalent mechanisms) shall be fitted and used on all construction vehicles and mobile plant regularly used on site.	Construction Contractor
19. Stationary noise sources shall be enclosed or shielded where possible.	Construction Contractor
20. Tree protection measures in accordance with AS4970 – *Protection of trees on development sites* shall be implemented to minimise the risk of impact on the structural root zones of trees to be retained.	Site Manager; Construction contractor

Safeguard / Measure	Responsibility
21. Pruning of trees where required is to be undertaken in accordance with AS 4373-1996 "Pruning of Amenity Trees".	Construction Contractor
22. Unexpected heritage finds procedures shall be applied: a. Staff working at the site shall be instructed to stop work immediately on identification of any suspected Aboriginal heritage artefact. If any objects are found, NSW Department of Planning and Environment (Heritage NSW ph:9873 8500) shall be contacted. b. If any non-indigenous relics are uncovered (i.e. silica tramway items): i. Works around the find shall stop immediately and the find physically protected. ii. The find shall be reported to the SCC Project Manager. iii. If the find is a relic, a mitigation strategy shall be developed and implemented. A s.140 (*Heritage Act 1977*) may be required if the find can't be avoided. iv. If the find is a relic, the Heritage Council shall be notified in accordance with s.146 of the *Heritage Act 1977*	Construction Contractor
23. In the event that any wildlife be significantly disturbed or injured during works, Council's Environmental Officers are to be contacted on 4429 3405, or if unavailable, Wildlife Rescue – South Coast should be contacted on 0418 427 214, to rescue and relocate the animal(s).	Construction Contractor
24. If engineering fill is imported to the site, all conditions prescribed in the applicable Resource Recovery Exemptions shall be complied with, including: • ensuring the producer of the waste has complied with the applicable Order such as testing and validation • ensuring the material has met all chemical and other material requirements specified in the applicable Order • keeping a written record of the following for a period of six years: o the quantity of material received o the name and address of the supplier	Site Manager; Construction contractor
25. If Virgin Excavated Natural Material (VENM) is taken to the site (*i.e.* without chemical testing and validation):	Site Manager; Construction contractor

Safeguard / Measure	Responsibility
a. the material must meet the definition of VENM (http://www.epa.nsw.gov.au/waste/virgin-material.htm) b. the supplier must fill out and complete the *VENM Certificate* The completed *VENM Certificate* shall be kept for at least six years and provided to the EPA upon any request.	
26. Any waste generated on site shall be reused in accordance with relevant Resource Recovery Orders and Exemptions, or otherwise disposed of at a licenced waste facility.	Construction Contractor
27. The batter below the carpark shall be stabilised with jute mat (or similar) and revegetated using locally occurring species such as *Lomandra longifolia,* Coffee Bush, Coastal Wattle, Swamp Lilly.	SCC Project Manager: Construction Contractor.
Post construction	
28. An asset form shall be trimmed to file 44574E on commissioning of the assets in Accordance with POL15/8 Asset Accounting Policy section 3.1.4 and POL16/79 Asset Management Policy section 3.3.	SCC Project Manager

8. SIGNIFICANCE EVALUATION & DECISION STATEMENT

This Review of Environmental Factors has assessed the likely environmental impacts, in the context of Part 5 of the Environmental Planning and Assessment Act 1979, of a proposed acticity by Shoalhaven City Council for the construction of an accessible viewing platform, walkway, single accessible carpark and associated items off Surfers Avenue, Narrawallee .

In consideration of the proposed activity as described in Section 1, in accordance with any design plans referred to in this report, and assuming the implementation of all proposed safeguards and mitigation measures (Section 7), it is determined that:

1. It is unlikely that there will be any significant environmental impact as a result of the proposed activity and an Environmental Impact Statement is not required.
2. The proposed activity will not be carried out in a declared area of outstanding biodiversity value and is not likely to significantly affect threatened species, populations or ecological communities, or their habitats, and a Species Impact Statement / BDAR is not required.
3. No statutory approvals, licences, permits or further external government consultations are required.
4. The proposed activity may proceed.

In accepting and adopting this REF, Shoalhaven City Council commits to ensuring the implementation of the proposed safeguards and mitigation measures identified in this report (Section 7) to minimise and/or prevent detrimental environmental impacts.

Determined by:

Troy Punnett

Unit Manager – District Engineer - Southern

Shoalhaven City Council Date: 24/1/23

9. REFERENCES

Acid Sulfate Soil Management Advisory Committee 1998 *Acid Sulfate Soil Manual.* NSW Agriculture. ISBN 0 7347 0000 8

DAWE (Department of Agriculture, Water and the Environment, Australian Government). 2021. *Species Profiles and Threats Database* (online database). Available at https://www.environment.gov.au/cgi-bin/sprat/public/sprat.pl

DECCW (Department of Environment, Climate Change and Water, NSW) 2010 Due Diligence Code of Practice for the Protection of Aboriginal Objects in New South Wales. https://www.environment.nsw.gov.au/-/media/OEH/Corporate-Site/Documents/Aboriginal-cultural-heritage/due-diligence-code-of-practice-aboriginal-objects-protection-100798.pdf

DoE (Department of Environment, Commonwealth of Australia). 2013. *Matters of National Environmental Significance Significant Impact Guidelines 1.1*. Available at: https://www.dcceew.gov.au/environment/epbc/publications/significant-impact-guidelines-11-matters-national-environmental-significance

Douglas Partners 2022 *Report on Geotechnical Investigation: Proposed Viewing Platform and Car Park, Surfers Avenue, Narrawallee.* Project 78319.02 (SCC document D23/20028)

Freeman (Peter Freeman Pty Ltd) 2003 *Heritage Study 1995 – 1998.* Report prepared for Shoalhaven City Council https://doc.shoalhaven.nsw.gov.au/displaydoc.aspx?record=D19/118673

Heritage NSW 2022 *Relics of local heritage significance: A guide for minor works with limited impact.* Information Sheet 2022.1 https://www.heritage.nsw.gov.au/assets/Relics-of-Local-heritage-significance-a-guide-to-minor-works-with-limited-impact.pdf

Navin Officer (Navin Officer Heritage Consultants) 2001 *Conjola Regional Sewerage Scheme – Cultural Heritage Component.* Unpublished report for CH2MHill Pty Ltd

NSW Government. 2022b. *Threatened Biodiversity Data Collection* (online database). Available at: https://www.environment.nsw.gov.au/AtlasApp/UI_Modules/TSM_/Default.aspx

OEH (Office of Environment and Heritage, NSW) 2017 Varied Sittella – *Profile* https://www.environment.nsw.gov.au/threatenedspeciesapp/profile.aspx?id=20135

OEH (Office of Environment and Heritage, NSW) 2019 *White-bellied Sea-Eagle – Profile* https://www.environment.nsw.gov.au/threatenedspeciesapp/profile.aspx?id=20322

APPENDIX A – The Proposed Activity

GENERAL:

1. THESE DRAWINGS SHALL BE READ IN CONJUNCTION WITH THE SHOALHAVEN CITY COUNCIL DCP100, RELEVANT AUSTRALIAN STANDARDS, OTHER CONSULTANTS DRAWINGS AND SPECIFICATIONS AND WITH SUCH OTHER WRITTEN INSTRUCTIONS AS MAY BE ISSUED.
2. ANY DISCREPANCIES OR OMISSIONS SHALL BE REFERRED TO THE SUPERINTENDENT FOR A DECISION BEFORE PROCEEDING WITH THE WORK.
3. ALL WORKMANSHIP AND MATERIALS SHALL COMPLY WITH THE BUILDING CODE OF AUSTRALIA AS AMENDED AND THE APPROPRIATE AND CURRENT AUSTRALIAN STANDARDS.
4. ALL DIMENSIONS ARE IN METRES UNLESS NOTED OTHERWISE.
5. DIMENSIONS SHALL NOT BE OBTAINED BY SCALING THE DRAWINGS.
6. ALL DIMENSIONS SHOWN ON THE DRAWINGS SHALL BE VERIFIED ON SITE BY THE BUILDER PRIOR TO CONSTRUCTION OR FABRICATION.
7. THE CONTRACTOR SHALL LOCATE AND LEVEL ALL EXISTING SERVICES PRIOR TO COMMENCING CONSTRUCTION AND SHALL MAKE ALL NECESSARY
8. ARRANGEMENTS WITH THE RELEVANT AUTHORITY TO RELOCATE OR ADJUST AS
9. REQUIRED. ALL COSTS TO BE BORNE BY THE APPLICANT.
10. THE CONTRACTOR SHALL NOT ENTER UPON OR DO ANY WORK WITHIN ADJACENT LAND WITHOUT PRIOR WRITTEN PERMISSION OF THE LAND OWNER.
11. THE CONTRACTOR SHALL PROVIDE MINIMUM 48 HOURS NOTICE TO THE PRINCIPAL FOR ALL INSPECTIONS.

SITE WORKS:

1. ALL WORKS TO BE IN ACCORDANCE WITH SPECIFICATIONS AND AUSTRALIAN STANDARDS. CONFLICTS SHALL BE REFERRED TO THE SUPERINTENDENT FOR DIRECTION.
2. THE CONTRACTOR IS TO DESIGN, OBTAIN APPROVALS AND CARRY OUT REQUIRED TEMPORARY TRAFFIC CONTROL PROCEDURES DURING CONSTRUCTION IN ACCORDANCE WITH RMS & SHOALHAVEN CITY COUNCIL REGULATIONS AND REQUIREMENTS.
3. THE CONTRACTOR IS TO OBTAIN ALL AUTHORITY APPROVALS AS REQUIRED.
4. RESTORE ALL PAVED, COVERED, GRASSED AND LANDSCAPED AREAS TO THEIR ORIGINAL CONDITION ON COMPLETION OF WORKS.
5. ON COMPLETION OF ANY TRENCHING WORKS, ALL DISTURBED AREAS SHALL BE RESTORED TO THEIR ORIGINAL CONDITION, INCLUDING KERBS, FOOTPATHS, CONCRETE AREAS, GRAVEL, GRASSED AREAS AND ROAD PAVEMENTS.
6. THE CONTRACTOR SHALL ARRANGE ALL SURVEY SETOUT TO BE CARRIED OUT BY A REGISTERED SURVEYOR.
7. THE CONTRACTOR SHALL VERIFY ALL DIMENSIONS AND EXISTING LEVELS ON SITE PRIOR TO LODGMENT OF TENDER AND PRIOR TO CONSTRUCTION.
8. THIS PLAN IS TO BE READ IN CONJUNCTION WITH THE ENGINEERING PLANS, AND ANY OTHER PLANS OR WRITTEN INSTRUCTIONS THAT MAY BE ISSUED RELATING TO DEVELOPMENT OF THE SUBJECT SITE.
9. ANY EXISTING TREES WHICH FORM PART OF THE FINAL LANDSCAPING PLAN SHALL BE PROTECTED FROM CONSTRUCTION ACTIVITIES BY:
   - (A) PROTECTING THEM WITH BARRIER FENCING OR SIMILAR MATERIALS INSTALLED OUTSIDE THE DRIP LINE,
   - (B) ENSURING THAT NOTHING IS NAILED TO THEM,
   - (C) PROHIBITING PAVING, GRADING, SEDIMENT WASH OR PLACING OF STOCKPILES WITHIN THE DRIP LINE EXCEPT UNDER THE FOLLOWING CONDITIONS:
     1. ENCROACHMENT ONLY OCCURS ON ONE SIDE AND NO CLOSER TO THE TRUNK THAN EITHER 1.5 METRES OR HALF THE DISTANCE BETWEEN THE OUTER EDGE OF THE DRIP LINE AND THE TRUNK, WHICH EVER IS GREATER.
     2. A DRAINAGE SYSTEM THAT ALLOWS AIR AND WATER TO CIRCULATE THROUGH THE ROOT ZONE (E.G. A GRAVEL BED) IS PLACED UNDER ALL FILL LAYERS OF MORE THAN 300 MILLIMETRES DEPTH.
     3. CARE IS TAKEN NOT TO CUT ROOTS UNNECESSARILY NOR TO COMPACT THE SOIL AROUND THEM.
10. DO NOT OBTAIN DIMENSIONS BY SCALING THE DRAWINGS.
11. IN CASE OF DOUBT OR DISCREPANCY REFER TO SUPERINTENDENT FOR CLARIFICATION OR CONFIRMATION PRIOR TO THE COMMENCEMENT OF CONSTRUCTION.
12. WHERE NEW WORKS ABUT EXISTING THE CONTRACTOR SHALL ENSURE THAT A SMOOTH EVEN PROFILE, FREE FROM ABRUPT CHANGES IS OBTAINED.
13. MAKE SMOOTH TRANSITION TO EXISTING FEATURES AND CONSTRUCTION.
14. THESE PLANS SHALL BE READ IN CONJUNCTION WITH ALL APPROVED DRAWINGS AND SPECIFICATIONS PREPARED BY OTHER PROJECT CONSULTANTS.
15. TRENCHES THROUGH EXISTING ROAD AND CONCRETE PAVEMENTS SHALL BE SAWCUT TO FULL DEPTH OF CONCRETE AND A MIN 50mm IN BITUMINOUS PAVING.
16. ALL CONSTRUCTION WORK IS TO BE CARRIED OUT SO THAT AT ANY TIME ADJOINING PROPERTY OWNERS ARE NOT DEPRIVED OF AN ALL-WEATHER ACCESS OR SUBJECTED TO ADDITIONAL STORM WATER RUN-OFF DURING THE PERIOD OF CONSTRUCTION.
17. ALL GREEN WASTE IS EITHER TO BE REMOVED FROM SITE OR MULCHED ON SITE AND SPREAD OVER DISTURBED AREAS. NO GREEN WASTE IS TO BE BURNT ON SITE.

EXISTING SERVICES:

1. CARE TO BE TAKEN WHEN EXCAVATING NEAR EXISTING SERVICES. NO MECHANICAL EXCAVATIONS ARE TO BE UNDERTAKEN OVER COMMUNICATION, GAS OR ELECTRICAL SERVICES. HAND EXCAVATION ONLY IN THESE AREAS.
2. IT IS THE RESPONSIBILITY OF THE CONTRACTOR TO DETERMINE AND CONFIRM THE LOCATION AND LEVEL OF ALL EXISTING SERVICES PRIOR TO THE COMMENCEMENT OF ANY WORK. ANY DISCREPANCIES SHALL BE REPORTED TO THE SUPERINTENDENT. CLEARANCES SHALL BE DISCUSSED WITH THE RELEVANT SERVICE AUTHORITIES.
3. THE CONTRACTOR SHALL PROTECT AND MAINTAIN ALL EXISTING SERVICES THAT ARE TO BE RETAINED IN THE VICINITY OF THE PROPOSED WORKS. ANY AND ALL DAMAGE TO THESE SERVICES AS A RESULT OF THESE WORKS SHALL BE REPAIRED BY THE CONTRACTOR UNDER THE DIRECTION OF THE SUPERINTENDENT, AND AT NO EXTRA COST.
4. THE CONTRACTOR SHALL ALLOW FOR ADJUSTMENT (IF REQUIRED) OF EXISTING SERVICES IN AREAS AFFECTED BY WORKS.
5. THE CONTRACTOR SHALL ALLOW FOR THE CAPPING OFF, EXCAVATION AND REMOVAL (IF REQUIRED) OF EXISTING SERVICES IN AREA AFFECTED BY WORKS UNLESS DIRECTED OTHERWISE ON THE DRAWINGS OR BY THE SUPERINTENDENT.
6. THE CONTRACTOR SHALL ENSURE THAT AT ALL TIMES SERVICES TO ALL BUILDINGS NOT AFFECTED BY THE WORKS ARE NOT DISRUPTED.
7. PRIOR TO COMMENCEMENT OF ANY WORKS THE CONTRACTOR SHALL GAIN APPROVAL FOR THE RELOCATION AND/OR CONSTRUCTION OF TEMPORARY SERVICES AND FOR ANY ASSOCIATED INTERRUPTION OF SUPPLY.
8. THE CONTRACTOR SHALL CONSTRUCT TEMPORARY SERVICES TO MAINTAIN EXISTING SUPPLY TO BUILDINGS REMAINING IN OPERATION DURING WORKS TO THE SATISFACTION AND APPROVAL OF THE SUPERINTENDENT. ONCE DIVERSION IS COMPLETE AND COMMISSIONED THE CONTRACTOR SHALL REMOVE ALL SUCH TEMPORARY SERVICES AND MAKE GOOD TO THE SATISFACTION OF THE SUPERINTENDENT.
9. PRIOR TO COMMENCEMENT OF EXCAVATION, THE CONTRACTOR SHALL DETERMINE THE LOCATION OF ALL SERVICES AND WILL BE RESPONSIBLE FOR ADJUSTMENT AND REPAIR OF SERVICES.
10. ADJUST ALL UTILITY SERVICE COVERS TO SUIT NEW GRADES & LEVELS TO SERVICE PROVIDERS SATISFACTION.

EARTHWORKS:

1. EARTHWORKS ARE TO BE CARRIED OUT IN ACCORDANCE WITH GEOTECHNICAL ENGINEERS RECOMMENDATIONS. REFER TO DOUGLAS & PARTNERS REPORT REFERENCE 78319.02.
2. STRIP TOPSOIL, VEGETABLE MATTER AND RUBBLE TO EXPOSE NATURALLY OCCURRING MATERIAL AND STOCKPILE ON SITE AS DIRECTED BY THE SUPERINTENDENT.
3. WHERE FILLING IS REQUIRED TO ACHIEVE DESIGN SUBGRADE, PROOF ROLL EXPOSED NATURAL SURFACE WITH A MINIMUM OF TEN PASSES OF A VIBRATING ROLLER (MINIMUM STATIC WEIGHT OF 10 TONNES) IN THE PRESENCE OF THE SUPERINTENDENT.
4. ALL SOFT, WET OR UNSUITABLE MATERIAL IS TO BE REMOVED AS DIRECTED BY THE SUPERINTENDENT AND REPLACED WITH APPROVED MATERIAL SATISFYING THE REQUIREMENTS LISTED BELOW.
5. THE CONTRACTOR SHALL PROGRAM THE EARTHWORKS OPERATION SO THAT THE WORKING AREAS ARE ADEQUATELY DRAINED DURING THE PERIOD OF CONSTRUCTION. THE SURFACE SHALL BE GRADED AND SEALED OFF TO REMOVE DEPRESSIONS, ROLLER MARKS AND SIMILAR WHICH WOULD ALLOW WATER TO POND AND PENETRATE THE UNDERLYING MATERIAL. ANY DAMAGE RESULTING FROM THE CONTRACTOR NOT OBSERVING THESE REQUIREMENTS SHALL BE RECTIFIED AT THE CONTRACTORS COST.
6. IT IS THE RESPONSIBILITY OF THE CONTRACTOR TO ENSURE AND MAINTAIN THE INTEGRITY OF ALL SERVICES, CONDUITS AND PIPES DURING CONSTRUCTION, SPECIFICALLY DURING THE BACKFILLING AND COMPACTION PROCEDURE. ANY AND ALL DAMAGE TO NEW OR EXISTING SERVICES AS A RESULT OF THESE WORKS SHALL BE REPAIRED BY THE CONTRACTOR AT NO EXTRA COST.
7. USE OF VIBRATING ROLLERS ARE TO BE LIMITED DUE TO THE CLOSENESS OF EXISTING STRUCTURES. SAFE DISTANCE = 1.5 x DRUM WEIGHT (DMW)

SUBGRADE NOTES:

1. FOLLOWING SITE ESTABLISHMENT THE CONTRACTOR IS TO PROOF ROLL EXPOSED SUBGRADE IN THE PRESENCE OF THE GEOTECHNICAL ENGINEER TO CONFIRM SUITABILITY OF SUBGRADE.
2. THE SUBGRADE IS TO BE COMPACTED TO ACHIEVE 100% STANDARD MAXIMUM DRY DENSITY, (AS1289E1.1), AT A MOISTURE CONTENT WITHIN 2% OF STANDARD OPTIMUM, OR ALTERNATIVE INSTRUCTION IS TO BE OBTAINED FROM A GEOTECHNICAL ENGINEER.
3. REMOVE ANY SOFT, HEAVING, WET OR UNSTABLE AREAS IDENTIFIED DURING PROOF ROLLING AND REPLACE USING SELECT IMPORTED FILL COMPACTED IN LAYERS NOT EXCEEDING 200mm MEASURED LOOSE TO ACHIEVE 100% STANDARD COMPACTION AS SPECIFIED ABOVE. OBTAIN WRITTEN APPROVAL FROM CLIENT PRIOR TO PROCEEDING WITH THE ABOVE WORK.
4. ANY FILL REQUIRED TO RAISE LEVELS TO UNDERSIDE OF PROPOSED SLAB OR PAVEMENT FORMATION TO BE APPROVED GRANULAR MATERIAL COMPACTED IN LAYERS NOT EXCEEDING 200mm MEASURED LOOSE TO ACHIEVE A MINIMUM 98% STANDARD MAXIMUM DRY DENSITY AT A MOISTURE CONTENT WITHIN 2% OF STANDARD OPTIMUM.
5. IMPORTED FILL IS TO CONSIST OF IMPORTED WELL-GRADED MATERIAL WITH A MAXIMUM PARTICLE SIZE OF 75mm, WITH 80% LESS THAN 20MM, AND A SOAKED C.B.R. GREATER THAN 15% AND PLASTICITY INDEX LESS THAN 12%.
6. BACKFILLING FOR SERVICE TRENCHES UNDER SLABS AND PAVEMENTS SHALL BE APPROVED WELL-GRADED GRANULAR MATERIAL. EITHER SELECT INSITU OR IMPORTED FILL COMPACTED AS SPECIFIED ABOVE.
7. DO NOT PROCEED WITH ANY EARTHWORKS WHICH WILL BE SUBJECT TO A VARIATION CLAIM WITHOUT PRIOR APPROVAL FROM CLIENT. VARIATIONS FOR EARTHWORKS WILL NOT BE APPROVED UNLESS FORMAL INSTRUCTION, INCLUDING VARIATION VOLUMES, IS OBTAINED FROM ENGINEER.

PAVEMENT NOTES:

1. PAVEMENT DETAILS HAVE BEEN DESIGNED ASSUMING A SUBGRADE WITH A MINIMUM SOAKED C.B.R. OF 2%. CBR. PAVEMENT DESIGN TO BE CONFIRMED BY GEOTECHNICAL TESTING BY BUILDER DURING CONSTRUCTION.
2. BASE AND SUB-BASE COURSES SHALL BE COMPACTED TO 98% MODIFIED MAXIMUM DRY DENSITY AS A MOISTURE CONTENT WITHIN 2% OF STANDARD OPTIMUM, MINIMUM SOAKED C.B.R. 80% UNO.
3. SUBGRADE SHALL BE APPROVED NATURAL SUBGRADE OR IMPORTED FILL. PROOF ROLL AND COMPACTED TO 100% STANDARD MAXIMUM DRY DENSITY UNO.
4. FILL MATERIALS WHICH ARE PRONE TO ACCELERATED WEATHERING WILL NOT BE ACCEPTED EG. SOME MUDSTONES, CLAYSTONES, SILTSTONES, SHALES AND OTHER ROCKS. ENDORSEMENT OF THE SUITABILITY OF THE PROPOSED FILLING MATERIAL IS TO BE MADE BY A GEOTECHNICAL ENGINEER PRIOR TO APPROVAL.

CONCRETE:

1. EACH CONCRETE POUR INCLUDING KERB & GUTTER SHALL BE INSPECTED PRIOR TO POURING.
2. THE CONTRACTOR SHALL GIVE 48 HOURS NOTICE OF POURS.
3. MINIMUM CONCRETE STRENGTH FOR PAVEMENTS SHALL BE F'C=25 MPA AT 28 DAYS.
4. ALL WORK SHALL BE COMPLETED TO AS3600.
5. REINFORCING SHALL BE TIED WITH MINIMUM COVER OF 40MM.
6. ALL CONCRETE SHALL BE FULLY COMPACTED BY MECHANICAL MEANS SUCH AS IMMERSION VIBRATOR.
7. SAMPLING AND TESTING TO AS 3600 SHALL BE UNDERTAKEN AND ALL COSTS MET BY THE CONTRACTOR.
8. ALL CONCRETE SHALL BE CURED BY IMPERMEABLE MEMBRANE, CURING COMPOUND OR OTHER EQUAL METHOD.
9. FORMWORK SHALL BE TO AS3610.
10. ALL DISTURBED AREAS INCLUDING BATTERS AND FOOTPATH AREAS ARE TO BE TOPSOILED, FERTILISED AND TURFED.

SIGNAGE AND LINEMARKING:

1. LINE MARKING AND PAINT SHALL BE IN ACCORDANCE WITH THE FOLLOWING STANDARDS. AS 2700 AND AS 2709
2. PAINT SHALL BE TYPE 3, CLASS A AND THE COLOUR SHALL BE WHITE AND NOT SUBJECT TO DISCOLOURATION BY BITUMEN FROM THE ROAD SURFACE. EACH LINE SHALL BE 80mm WIDE. ALL PAINT SHALL BE APPLIED BY MECHANICAL SPRAYER.
3. LINE MARKING SHALL BE SPOTTED OUT AND APPROVED PRIOR TO SPRAYING.
4. PAINT SHALL BE APPLIED AT A WET THICKNESS OF BETWEEN 0.35mm TO 0.40mm.
5. PAINT 80mm LINEMARKING TO CARPARK PAVEMENT.
6. ALL SIGNAGE TO BE INSTALLED IN ACCORDANCE WITH AUSTRALIAN STANDARDS.

ACCESS AND SAFETY:

1. THE CONTRACTOR SHALL COMPLY WITH ALL STATUTORY AND INDUSTRIAL REQUIREMENTS FOR PROVISION OF A SAFE WORKING ENVIRONMENT INCLUDING TRAFFIC CONTROL.
2. THE CONTRACTOR SHALL ENSURE THAT AT ALL TIMES ACCESS TO ALL BUILDINGS ADJACENT THE WORKS IS NOT DISRUPTED.
3. WHERE NECESSARY THE CONTRACTOR SHALL PROVIDE SAFE PASSAGE OF VEHICLES AND/OR PEDESTRIANS THROUGH OR BY THE SITE.
4. TRAFFIC CONTROL MEASURES IN ACCORDANCE WITH AS1742.3 ARE TO BE IN PLACE AND MAINTAINED AT ALL TIMES. (TRAFFIC CONTROL PLANS TO BE SUBMITTED PRIOR TO COMMENCEMENT OF WORK.)

TRAFFIC MANAGEMENT:

1. PARKING OF VEHICLES OR LOADING/UNLOADING OF VEHICLES ON ROADWAYS MAY CAUSE A TRAFFIC HAZARD. DURING CONSTRUCTION, MAINTENANCE OR DEMOLITION DESIGNATED PARKING FOR WORKERS AND LOADING AREAS SHOULD BE PROVIDED. TRAINED TRAFFIC MANAGEMENT PERSONNEL SHOULD BE RESPONSIBLE FOR THE SUPERVISION OF THESE AREAS. DELIVERY OF CONSTRUCTION MATERIALS SHOULD BE WELL PLANNED TO AVOID CONGESTION OF TRAFFIC AREAS AND TRAINED TRAFFIC MANAGEMENT PERSONNEL SHOULD BE USED TO SUPERVISE LOADING/UNLOADING AREAS.

2. BUSY CONSTRUCTION AND DEMOLITION SITES PRESENT A RISK OF COLLISION WHERE DELIVERIES AND OTHER TRAFFIC ARE MOVING WITHIN THE SITE. A TRAFFIC CONTROL PLAN SUPERVISED BY TRAINED TRAFFIC MANAGEMENT PERSONNEL SHOULD BE ADOPTED FOR THE WORK SITE.

SURVEY NOTE:

1. THE LOCATION OF UNDERGROUND SERVICES SHOWN ON THESE PLANS IS INDICATIVE ONLY.
2. IT IS THE CONTRACTORS RESPONSIBILITY TO LOCATE UNDERGROUND SERVICES BY CAREFUL HAND POT-HOLING PRIOR TO ANY EXCAVATION AND EXERCISE DUE CARE DURING THAT EXCAVATION.

STORMWATER NOTES:

1. CONTRACTOR IS TO VERIFY THE LEVEL OF ALL EXISTING SERVICES PRIOR TO COMMENCEMENT OF ANY EXCAVATION.
2. CONTRACTOR SHALL CONFIRM ALL INVERTS AND GRADES PRIOR TO CONSTRUCTION.
3. ALL PIPES LESS THAN OR EQUAL TO Ø225mm AND PIPES RUNNING UNDER FLOOR SLABS ARE TO BE SOLVENT WELD-JOINTED SEWER GRADE uPVC CLASS SH.
4. ALL PIPES ARE TO BE LAID AT (min) 1.0% GRADE (UNO), UNLESS OTHERWISE NOTED ON DRAWINGS.
5. MATERIAL USED FOR BEDDING OF PIPES SHALL BE APPROVED NON-COHESIVE GRANULAR MATERIAL HAVING HIGH PERMEABILITY AND HIGH STABILITY WHEN SATURATED AND FREE OF ORGANIC AND CLAY MATERIAL.
6. HAND-EXCAVATE STORMWATER PIPES IN THE VICINITY OF TREE ROOTS.
7. ANY PIPES OVER 16% GRADE SHALL HAVE CONCRETE BULKHEADS AT ALL JOINTS.
8. WHERE TRENCHES ARE IN ROCK, THE PIPE SHALL BE BEDDED ON A MIN. 50mm CONCRETE BED (OR 75mm THICK BED OF 12mm BLUE METAL) UNDER THE BARREL OF THE PIPE. THE PIPE COLLAR AT NO POINT SHALL BEAR ON THE ROCK.
9. BEDDING SHALL BE TYPE HS2 UNDER ROADS; H2 GENERAL AREAS, IN ACCORDANCE WITH CURRENT RELEVANT INDUSTRY STANDARDS AND GUIDELINES.
10. PROVIDE 100mm MIN COVER TO PIPES NOT SUBJECT TO VEHICULAR LOADING TO AREAS WITHOUT PAVEMENT AND 500mm COVER IN AREAS SUBJECT TO CONSTRUCTION EQUIPMENT LOADING. MINIMUM COVER TO PIPES 300mm DIA. AND OVER GENERALLY SHALL BE 600mm IN CARPARK & ROADWAY AREAS U.N.O.
11. PROVIDE SEPARATION BETWEEN SERVICES IN ACCORDANCE WITH AS 3500.
12. **COVERS:**
    - A) USE HOT DIPPED GALVANISED COVERS AND GRATES COMPLYING WITH RELEVANT AUSTRALIAN STANDARDS.
    - B) UNLESS DETAILED OR SPECIFIED OTHERWISE COVERS AND GRATES TO BE CLASS "C" IN VEHICULAR PAVEMENTS AND CLASS "B" ELSEWHERE.
13. GRATED DRAINS SHALL BE MINIMUM 150wx150d INTERNAL DIMENSIONS WITH 1% FALL (MIN.) TO THE INVERT OF THE GRATED DRAIN (REFER TO STORMWATER PLANS). GRATES TO DRAINS SHALL BE SCREW FIXED INTO POSITION.
14. ALL PIPE BENDS, JUNCTIONS, ETC. ARE TO BE PROVIDED USING PURPOSE MADE FITTINGS OR STORMWATER PITS.
15. THE CONTRACTOR SHALL SUPPLY AND INSTALL ALL FITTINGS AND SPECIALS INCLUDING VARIOUS PIPE ADAPTERS TO ENSURE PROPER CONNECTION BETWEEN DISSIMILAR PIPEWORK.
16. PIT DIMENSIONS SHALL BE IN ACCORDANCE WITH AS 3500.3 TABLE 8.2. ALL BASES OF PITS TO BE BENCHED TO HALF PIPE DEPTH AND PROVIDE GALVANISED ANGLE SURROUNDS TO GRATE.
    ALL CONNECTIONS TO EXISTING DRAINAGE PITS SHALL BE MADE IN A TRADESMAN-LIKE MANNER AND THE INTERNAL WALL OF THE PIT AT PIPE PENETRATIONS SHALL BE CEMENT RENDERED TO ENSURE A SMOOTH FINISH.
17. INSPECTION OPENINGS SHALL BE INSTALLED WHERE REQUIRED IN ACCORDANCE WITH AS 3500.3.
18. THE CONTRACTOR SHALL ENSURE AND PROTECT THE INTEGRITY OF ALL STORMWATER PIPES DURING CONSTRUCTION. ANY AND ALL DAMAGE TO THESE PIPES AS A RESULT OF THESE WORKS SHALL BE REPAIRED BY THE CONTRACTOR UNDER THE DIRECTION OF THE SUPERINTENDENT, AND AT NO EXTRA COST.
19. INSTALL TEMPORARY SEDIMENT BARRIERS TO INLET PITS, UNTIL SURROUNDING AREAS ARE PAVED AND TURFED.
20. ALL OTHER STORMWATER WORKS SHALL BE CARRIED OUT IN ACCORDANCE WITH AS3500.3 AND SHOALHAVEN CITY COUNCIL DEVELOPMENT DESIGN SPECIFICATIONS.

SUB-SOIL DRAINAGE NOTES:

21. 100Ø SUBSOIL DRAINAGE LINES WITH NON-WOVEN GEOTEXTILE FILTER SOCK SURROUND (LAID AT MIN. 1.0% GRADE) ARE TO BE CONNECTED TO A STORMWATER DRAINAGE PIT. SUBSOIL DRAINAGE LINES TO BE PROVIDED IN THE FOLLOWING LOCATIONS:
    - 21.1. TO THE HIGH SIDE OF PROPOSED TRAFFICKED PAVEMENT AREAS.
    - 21.2. TO ALL PLANTER AND TREE BEDS ADJACENT TO PAVEMENT AREAS.
    - 21.3. BEHIND RETAINING WALLS (IN ACCORDANCE WITH TYPICAL DETAILS).
    - 21.4. IN LOCATIONS SHOWN ON DRAWINGS (BOTH ON THESE DRAWINGS AND OTHER PROJECT DOCUMENTATION).
    - 21.5. TO ADDITIONAL AREAS WHERE SUB-SOIL DRAINAGE IS DEEMED TO BE REQUIRED BY THE CONTRACTOR.

22. WHERE SUBSOIL DRAINAGE PASSES BENEATH BUILDINGS, PAVED AREAS AND/OR PAVEMENTS THE CONTRACTOR IS TO ENSURE 100Ø CLASS 'SN10' uPVC DRAINAGE LINE IS USED. PROPRIETARY FITTINGS ARE TO CONNECT BETWEEN THE TWO PIPE TYPES.

23. THE CONTRACTOR IS TO INSTALL INSPECTION OPENINGS/FLUSH POINTS TO ALL SUBSOIL DRAINAGE LINES AND DOWNPIPE LINES IN ACCORDANCE WITH COUNCIL SPECIFICATIONS AND AT MAXIMUM 30m CENTRES AND ALL UPSTREAM ENDPOINTS.

24. PROVIDE 3.0m LENGTH OF 100Ø SUBSOIL DRAINAGE LINE WRAPPED IN NON-WOVEN GEOTEXTILE FILTER FABRIC TO THE UPSTREAM SIDE OF STORMWATER PITS (LAID IN STORMWATER PIPE TRENCHES AND CONNECTED TO DRAINAGE PIT).

3D INFORMATION DISCLAIMER:

1. PLEASE BE ADVISED THAT THE 3D INFORMATION FILE, IF SUPPLIED, IS DEEMED TO BE AN ACCURATE REFLECTION OF WESTLAKE PUNNETT's DESIGN AT THE TIME OF FINAL DESIGN DEVELOPMENT AND MAY NOT FULLY REFLECT THE DESIGN SURFACE AS PRESENTED ON BOTH THE CIVIL ENGINEERING AND LANDSCAPE ARCHITECTURE PLANS. THIS INFORMATION SHALL BE VERIFIED BY THE CONTRACTOR PRIOR TO INCORPORATION OF THE 3D INFORMATION FILE INTO THE CONSTRUCTION WORKS.
2. YOU ARE FURTHER ADVISED THAT ISSUED/HARDCOPY PDF PLANS AND DOCUMENTS TAKE PRECEDENCE OVER THE SUPPLIED ELECTRONIC INFORMATION AND ANY INCONSISTENCIES SHOULD BE REPORTED TO WESTLAKE PUNNETT PRIOR TO THEIR INCORPORATION INTO THE WORKS.
3. WESTLAKE PUNNETT & ASSOCIATES TAKES NO RESPONSIBILITY FOR THE USE OF NON-VERIFIED 3D DESIGN INFORMATION USED IN THE WORKS.
4. THE USE OF THE 3D INFORMATION FILE SHALL CONSTITUTE ACKNOWLEDGEMENT AND ACCEPTANCE OF THE ABOVE STATEMENTS BY THE FILES RECIPIENT.

VIEWING PLATFORM & CARPARK
SURFERS AVENUE, NARRAWALLEE

CIVIL DRAWING LIST

22142/C01	NOTES
22142/C02	SITE PLAN
22142/C03	CIVIL WORKS PLAN
22142/C04	PAVEMENT JOINTING & SEDIMENT EROSION CONTROL PLAN
22142/C05	SEDIMENT EROSION CONTROL DETAILS
22142/C06	VEHICLE TURNING PATH PLAN

THIS DRAWING AND THE CONCEPTS CONTAINED THEREIN ARE THE PROPERTY OF WESTLAKE PUNNETT & ASSOCIATES PTY. LTD. NO UNAUTHORISED COPYING IS PERMITTED. NO STRUCTURE IS TO BE CONSTRUCTED BASED ON THIS DRAWING, OR PART OF THIS DRAWING, WITHOUT THE WRITTEN PERMISSION OF WESTLAKE PUNNETT & ASSOCIATES PTY. LTD. ALL DIMENSIONS SHALL BE VERIFIED ON SITE. WHERE DIMENSIONS DIFFER FROM THOSE SHOWN ON ARCHITECTURAL DETAILS, DIRECTION SHALL BE OBTAINED FROM WESTLAKE PUNNETT & ASSOCIATES P/L. DO NOT SCALE - NO RESPONSIBILITY WILL BE TAKEN BY WESTLAKE PUNNETT & ASSOCIATES P/L FOR ANY DISCREPANCIES CAUSED BY SCALING THESE DRAWINGS.

Rev.	Amendments	Approved	Date

WESTLAKE PUNNETT
office@westlakepunnett.com.au
PO Box 1573 NOWRA 2541

CIVIL & STRUCTURAL ENGINEERS
WWW.WESTLAKEPUNNETT.COM.AU
WOLLONGONG (02) 4211 0393
NOWRA (02) 4423 5533
ULLADULLA (02) 4455 4397
RESIDENTIAL - COMMERCIAL - INDUSTRIAL

NOTES

PROJECT: VIEWING PLATFORM & CARPARK
AT: SURFERS AVENUE, NARRAWALLEE
FOR: SHOALHAVEN CITY COUNCIL

Design:	J.Taylor
Drawn:	J.Taylor
Checked:	S.Punnett
Date:	17/10/2020
Drawing No.	22142/C01
Rev	–

SITE PLAN

SCALE 1:200

LEGEND

16.8	EXISTING CONTOUR LINE 0.2m INTERVAL
	EXISTING 375ØRCP STORMWATER DRAINAGE LINE
E(O/H)	EXISTING OVER HEAD POWER LINES
S	EXISTING 150VCP GRAVITY SEWER MAIN
SRM	EXISTING 200AC SEWER RISING MAIN
W	EXISTING 100AC WATER MAIN
T	EXISTING COMMUNICATIONS LINE

www.dialbeforeyoudig.com.au

DIAL 1100 BEFORE YOU DIG

NOT ALL SERVICES ARE SHOWN. SERVICES ARE TO BE POT HOLED PRIOR TO COMMENCEMENT OF WORKS AND CLEARANCE REQUIREMENT DISCUSSED WITH WESTLAKE PUNNETT & THE SERVICE PROVIDERS.

UNDERGROUND SERVICES SEARCH SHOULD BE UNDERTAKEN PRIOR TO ANY EXCAVATION TAKING PLACE UPON THE SITE

FOR CC APPROVAL

0 5 10 15 20m

SCALE 1:200 (A1), 1:400 (A3)

THIS DRAWING AND THE CONCEPTS CONTAINED THEREIN ARE THE PROPERTY OF WESTLAKE PUNNETT & ASSOCIATES PTY. LTD. NO UNAUTHORISED COPYING IS PERMITTED. NO STRUCTURE IS TO BE CONSTRUCTED BASED ON THIS DRAWING, OR PART OF THIS DRAWING, WITHOUT THE WRITTEN PERMISSION OF WESTLAKE PUNNETT & ASSOCIATES PTY. LTD. ALL DIMENSIONS SHALL BE VERIFIED ON SITE. WHERE DIMENSIONS DIFFER FROM THOSE SHOWN ON ARCHITECTURAL DETAILS, DIRECTION SHALL BE OBTAINED FROM WESTLAKE PUNNETT & ASSOCIATES P/L. DO NOT SCALE - NO RESPONSIBILITY WILL BE TAKEN BY WESTLAKE PUNNETT & ASSOCIATES P/L FOR ANY DISCREPANCIES CAUSED BY SCALING THESE DRAWINGS.

Rev.	Amendments	Approved	Date

WESTLAKE PUNNETT
office@westlakepunnett.com.au
PO Box 1573 NOWRA 2541

CIVIL & STRUCTURAL ENGINEERS
WWW.WESTLAKEPUNNETT.COM.AU
WOLLONGONG (02) 4211 0393
NOWRA (02) 4423 5533
ULLADULLA (02) 4455 4397
RESIDENTIAL - COMMERCIAL - INDUSTRIAL

SITE PLAN

PROJECT: VIEWING PLATFORM & CARPARK
AT: SURFERS AVENUE, NARRAWALLEE
FOR: SHOALHAVEN CITY COUNCIL

Design:	J.Taylor
Drawn:	J.Taylor
Checked:	S.Punnett
Date:	17/10/2022
Drawing No.	22142/C02
Rev	–

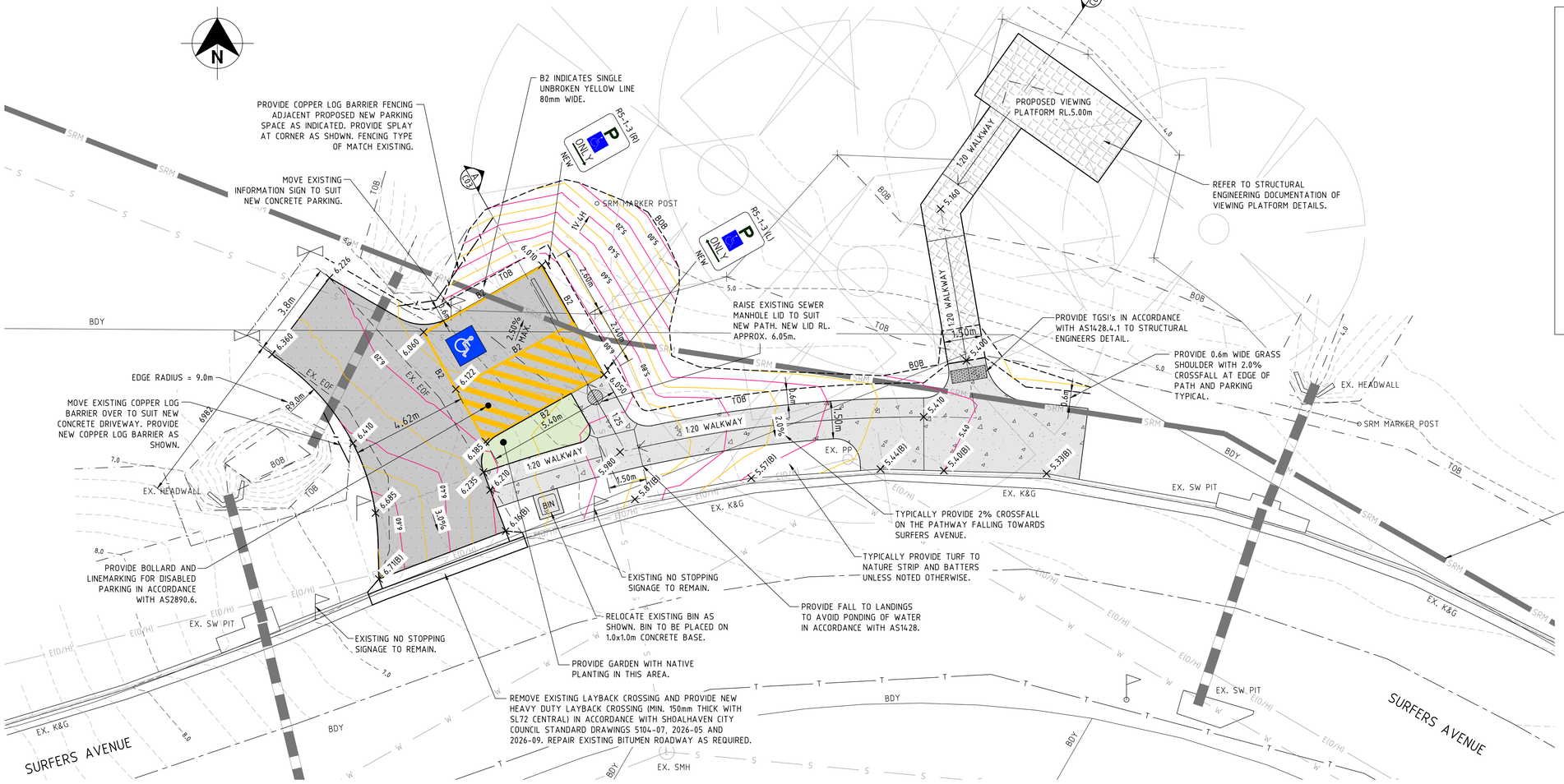

CIVIL WORKS PLAN

SCALE 1:100

LEGEND

14.0	PROPOSED DESIGN MAJOR CONTOUR LINE 0.20m INTERVAL
14.1	PROPOSED DESIGN MINOR CONTOUR LINE 0.10m INTERVAL
16.8	EXISTING CONTOUR LINE 0.2m INTERVAL
	EXISTING 375ØRCP STORMWATER DRAINAGE LINE
E(O/H)	EXISTING OVER HEAD POWER LINES
S	EXISTING 150VCP GRAVITY SEWER MAIN
SRM	EXISTING 200AC SEWER RISING MAIN
W	EXISTING 100AC WATER MAIN
T	EXISTING COMMUNICATIONS LINE
+14.475	DESIGN SPOT LEVEL
+14.475(B)	DESIGN SPOT LEVEL (BACK OF KERB)

LINEMARKING AND SIGNAGE NOTES

1. ALL TRAFFIC CONTROL DEVICES SHALL BE IN ACCORDANCE WITH AS1742 & RTA STANDARDS.
2. ALL LINES TO BE MARKED WITH REFLECTIVE PAVEMENT MARKING PAINT.
3. ALL SIGN POSTS ARE TO BE INSTALLED WITH A "V-LOCK INSERT".
4. ALL REGULATORY SIGNS TO BE "B" SIZE UNLESS SHOWN OTHERWISE.

NOTE:
LOCATION OF EXISTING SEWER RISING MAIN APPROXIMATE ONLY BASED ON SHOALHAVEN CITY COUNCILS ONLINE GIS MAPPING DATA. SEWER RISING MAIN TO BE POTHOLED ON SITE PRIOR TO COMMENCING CONSTRUCTION WORKS.

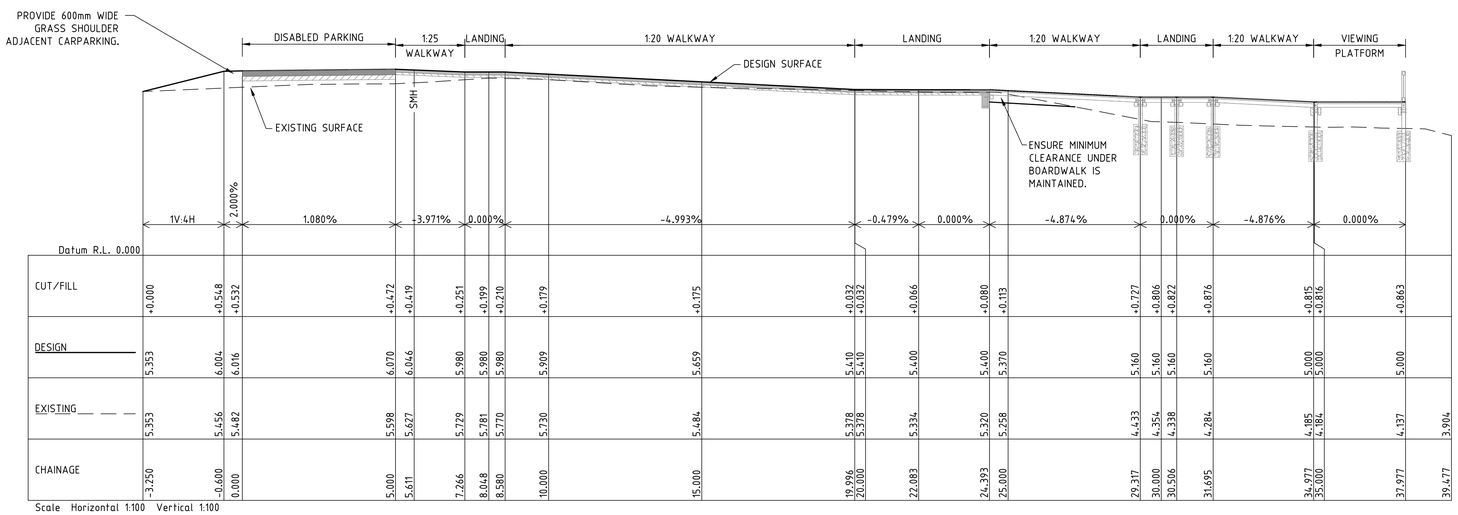

SECTION A-A (DISABLED WALKWAY LONGITUDINAL SECTION)

SCALE 1:100V 1:100H

www.dialbeforeyoudig.com.au
DIAL1100 BEFORE YOU DIG

NOT ALL SERVICES ARE SHOWN. SERVICES ARE TO BE POT HOLED PRIOR TO COMMENCEMENT OF WORKS AND CLEARANCE REQUIREMENT DISCUSSED WITH WESTLAKE PUNNETT & THE SERVICE PROVIDERS.

UNDERGROUND SERVICES SEARCH SHOULD BE UNDERTAKEN PRIOR TO ANY EXCAVATION TAKING PLACE UPON THE SITE

FOR CC APPROVAL

0 1 2 4 6 8 10m
SCALE 1:100 (A1), 1:200 (A3)

THIS DRAWING AND THE CONCEPTS CONTAINED THEREIN ARE THE PROPERTY OF WESTLAKE PUNNETT & ASSOCIATES PTY. LTD. NO UNAUTHORISED COPYING IS PERMITTED. NO STRUCTURE IS TO BE CONSTRUCTED BASED ON THIS DRAWING, OR PART OF THIS DRAWING, WITHOUT THE WRITTEN PERMISSION OF WESTLAKE PUNNETT & ASSOCIATES PTY. LTD. ALL DIMENSIONS SHALL BE VERIFIED ON SITE. WHERE DIMENSIONS DIFFER FROM THOSE SHOWN ON ARCHITECTURAL DETAILS, DIRECTION SHALL BE OBTAINED FROM WESTLAKE PUNNETT & ASSOCIATES P/L. DO NOT SCALE - NO RESPONSIBILITY WILL BE TAKEN BY WESTLAKE PUNNETT & ASSOCIATES P/L FOR ANY DISCREPANCIES CAUSED BY SCALING THESE DRAWINGS.

Rev.	Amendments	Approved	Date

WESTLAKE PUNNETT
office@westlakepunnett.com.au
PO Box 1573 NOWRA 2541

CIVIL & STRUCTURAL ENGINEERS
WWW.WESTLAKEPUNNETT.COM.AU
WOLLONGONG (02) 4211 0393
NOWRA (02) 4423 5533
ULLADULLA (02) 4455 4397
RESIDENTIAL - COMMERCIAL - INDUSTRIAL

CIVIL WORKS PLAN

PROJECT: VIEWING PLATFORM & CARPARK
AT: SURFERS AVENUE, NARRAWALLEE
FOR: SHOALHAVEN CITY COUNCIL

Design:	J.Taylor
Drawn:	J.Taylor
Checked:	S.Punnett
Date:	17/10/2022
Drawing No.	22142/C03
Rev	–

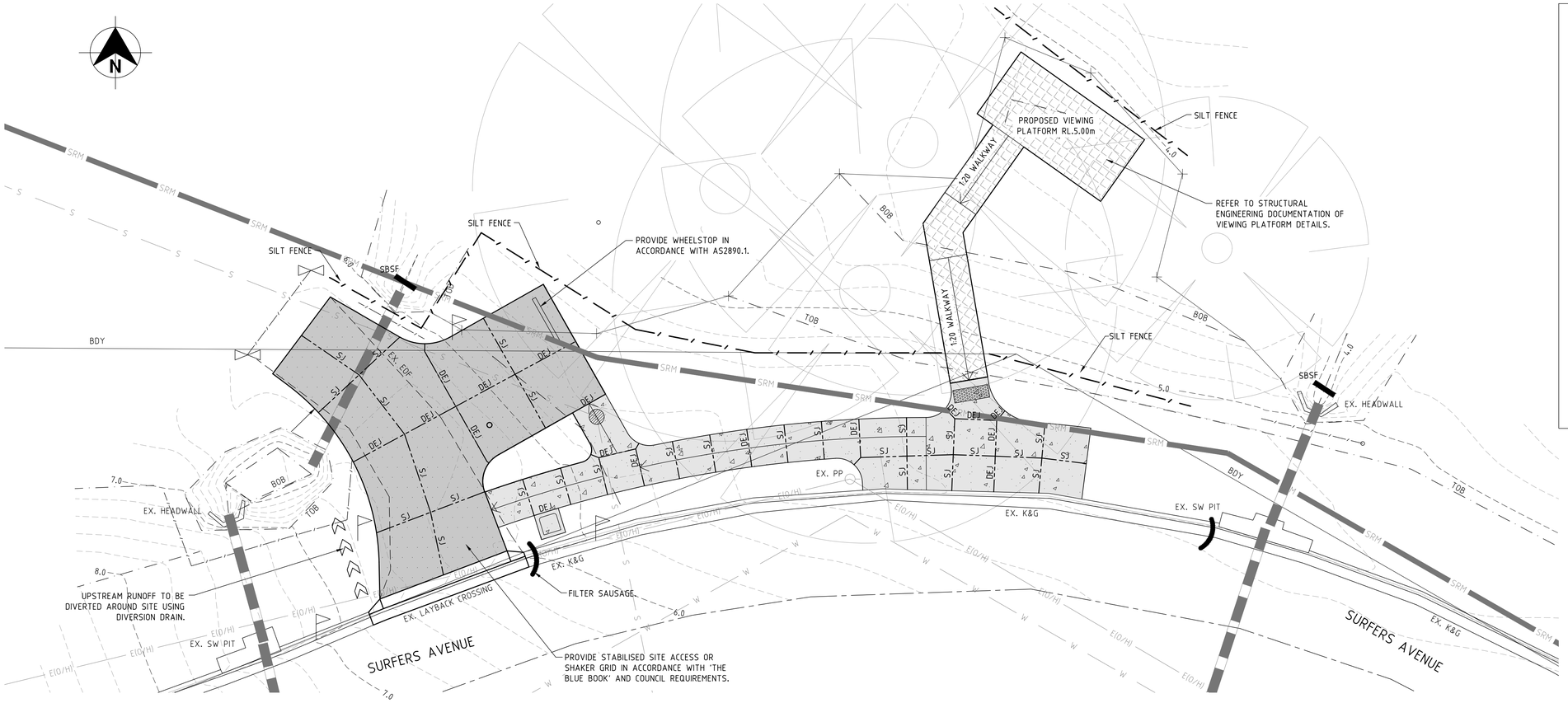

PAVEMENT JOINTING & SEDIMENT EROSION CONTROL PLAN

SCALE 1:100

LEGEND

- 14.0 — PROPOSED DESIGN MAJOR CONTOUR LINE 0.20m INTERVAL
- 14.1 — PROPOSED DESIGN MINOR CONTOUR LINE 0.10m INTERVAL
- 16.8 — EXISTING CONTOUR LINE 0.2m INTERVAL
- EXISTING 375ØRCP STORMWATER DRAINAGE LINE
- E(O/H) — EXISTING OVER HEAD POWER LINES
- S — EXISTING 150VCP GRAVITY SEWER MAIN
- SRM — EXISTING 200AC SEWER RISING MAIN
- W — EXISTING 100AC WATER MAIN
- T — EXISTING COMMUNICATIONS LINE
- EROSION CONTROL MEASURES PROVIDE FILTER 'SAUSAGES' AT ALL STORMWATER PITS AND SPACED AT MAX 30m INTERVALS IN KERBS
- SBSF — STRAW BALE SEDIMENT FILTER
- SILT STOP FENCE
- EARTH BANK LOW FLOW (SD 5-5)

JOINTING LEGEND:

DEJ = DOWELLED EXPANSION JOINT. REFER TO DETAIL.
SJ = WEAKENED PLANE SAWN JOINT. REFER TO DETAIL.
KJ = KEY JOINT. REFER TO DETAIL.
EJ = EXPANSION JOINT. REFER TO DETAIL.
IK = INTEGRAL KERB. REFER TO DETAIL.

\ = 2-N12 RE-ENTRANT CORNER BARS 1500 LONG TIED TO UNDERSIDE OF TOP REINFORCING STEEL.

PAVEMENT NOTES:

1. SUB BASE = REFER TO PAVEMENT KEY
2. BASE = REFER TO PAVEMENT KEY.
3. ANY FILL TO BE APPROVED GRANULAR MATERIAL.
4. REPLACEMENT OF NATURAL SUBGRADE TO BE RIPPED SANDSTONE OR SIMILAR MATERIAL WITH CBR NOT LESS THAN 10% WHEN COMPACTED TO 100% STANDARD COMPACTION.
5. PAVEMENT HAS BEEN DESIGNED ASSUMING A MINIMUM SUBGRADE CBR OF 2%. CBR TO BE CONFIRMED BY BUILDER PRIOR TO CONSTRUCTION.
6. CONTRACTOR TO ALLOW FOR COMPACTION TESTING IN ACCORDANCE WITH THE RELEVANT AUSTRALIAN STANDARDS DURING CONSTRUCTION.

PAVEMENT KEY:

= **CONCRETE PAVEMENT** 180mm THICK 32MPa REINFORCED WITH SL82 MESH JOINTED ON 150mm THICK LEAN MIX CONCRETE SUB-BASE. 40mm TOP COVER.

= **CONCRETE WALKWAY PAVEMENT** 110mm THICK 25MPa REINFORCED WITH SL82 MESH JOINTED ON 75mm THICK DGB20 COMPACTED TO 98% MODIFIED. 40mm TOP COVER.

NOTE:
THE CONCRETE PAVEMENT THICKNESS AND DETAILS HAVE BEEN DESIGNED ASSUMING A SUBGRADE WITH A MINIMUM SOAKED C.B.R OF 2.0%. THE PAVEMENT DESIGN IS TO BE CONFIRMED BY GEOTECHNICAL ENGINEER ENGAGED BY THE BUILDER DURING CONSTRUCTION.

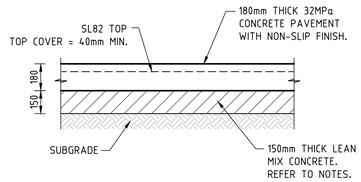

TYPICAL PAVEMENT TYPE 1 DETAIL
SCALE 1:20

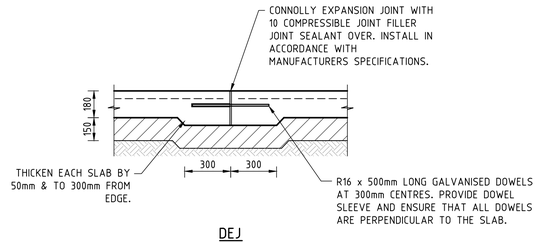

DEJ
TYPICAL DOWELLED EXPANSION JOINT DETAIL
SCALE 1:20

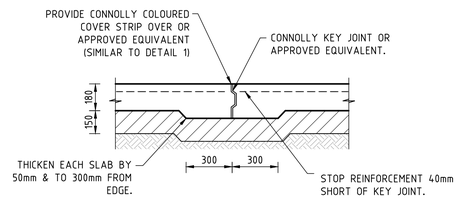

KJ
TYPICAL KEY JOINT DETAIL
SCALE 1:20

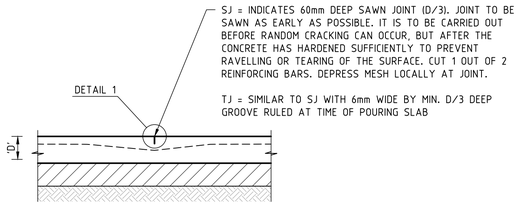

TJ/SJ
TYPICAL TOOLED JOINT/SAWN JOINT DETAIL
SCALE 1:20

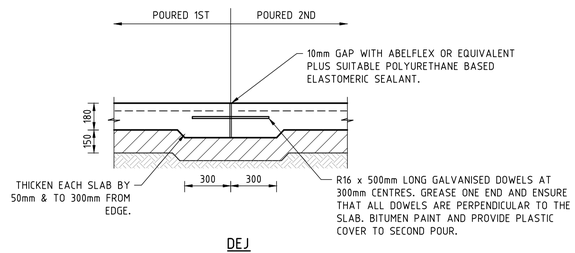

DEJ
ALTERNATIVE DOWELLED EXPANSION JOINT DETAIL
SCALE 1:20

NOTE:
EJ TYPICALLY NOT INDICATED ON PLAN. PROVIDE THIS DETAIL WHERE PAVING SLABS ABUT BUILDINGS, RETAINING WALLS AND OTHER STRUCTURES.

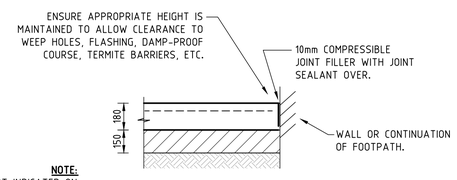

EJ
TYPICAL EXPANSION JOINT DETAIL
SCALE 1:20

www.dialbeforeyoudig.com.au
DIAL 1100
BEFORE YOU DIG

FOR CC APPROVAL

NOT ALL SERVICES ARE SHOWN. SERVICES ARE TO BE POT HOLED PRIOR TO COMMENCEMENT OF WORKS AND CLEARANCE REQUIREMENT DISCUSSED WITH WESTLAKE PUNNETT & THE SERVICE PROVIDERS.

UNDERGROUND SERVICES SEARCH SHOULD BE UNDERTAKEN PRIOR TO ANY EXCAVATION TAKING PLACE UPON THE SITE

0 0.5 1 1.5 2m
SCALE 1:20 (A1), 1:40 (A3)

0 1 2 4 6 8 10m
SCALE 1:100 (A1), 1:200 (A3)

THIS DRAWING AND THE CONCEPTS CONTAINED THEREIN ARE THE PROPERTY OF WESTLAKE PUNNETT & ASSOCIATES PTY. LTD. NO UNAUTHORISED COPYING IS PERMITTED. NO STRUCTURE IS TO BE CONSTRUCTED BASED ON THIS DRAWING, OR PART OF THIS DRAWING, WITHOUT THE WRITTEN PERMISSION OF WESTLAKE PUNNETT & ASSOCIATES PTY. LTD. ALL DIMENSIONS SHALL BE VERIFIED ON SITE. WHERE DIMENSIONS DIFFER FROM THOSE SHOWN ON ARCHITECTURAL DETAILS, DIRECTION SHALL BE OBTAINED FROM WESTLAKE PUNNETT & ASSOCIATES P/L. DO NOT SCALE - NO RESPONSIBILITY WILL BE TAKEN BY WESTLAKE PUNNETT & ASSOCIATES P/L FOR ANY DISCREPANCIES CAUSED BY SCALING THESE DRAWINGS.

Rev.	Amendments	Approved	Date

WESTLAKE PUNNETT
office@westlakepunnett.com.au
PO Box 1573 NOWRA 2541

CIVIL & STRUCTURAL ENGINEERS
WWW.WESTLAKEPUNNETT.COM.AU
WOLLONGONG (02) 4211 0393
NOWRA (02) 4423 5533
ULLADULLA (02) 4455 4397
RESIDENTIAL - COMMERCIAL - INDUSTRIAL

PAVEMENT JOINTING & SEDIMENT EROSION CONTROL PLAN

PROJECT: VIEWING PLATFORM & CARPARK
AT: SURFERS AVENUE, NARRAWALLEE
FOR: SHOALHAVEN CITY COUNCIL

Design: J.Taylor
Drawn: J.Taylor
Checked: S.Punnett
Date: 17/10/2022
Drawing No. 22142/C04
Rev –

SOIL AND WATER MANAGEMENT NOTES

1. THE SOIL AND WATER MANAGEMENT PLAN IS TO BE READ IN CONJUNCTION WITH THE ENGINEERING PLANS AND COUNCIL'S WRITTEN GUIDELINES FOR THE DEVELOPMENT OF LAND.

2. CONTRACTORS SHALL ENSURE THAT ALL SOIL AND WATER MANAGEMENT WORKS ARE UNDERTAKEN AS SPECIFIED ON THE PLAN AND IN ACCORDANCE WITH THE GUIDELINES SHOWN IN 'MANAGING URBAN STORMWATER - SOILS AND CONSTRUCTION 4TH EDITION 2004' (THE BLUE BOOK).

3. ALL CONTRACTORS AND SUBCONTRACTORS ARE RESPONSIBLE FOR REDUCING THE SOIL EROSION AND POLLUTION OF DOWNSLOPE AREAS.

4. THE SOIL EROSION HAZARD ON THE SITE IS TO BE KEPT AS LOW AS POSSIBLE AND GENERALLY IN ACORDANCE WITH THE FOLLOWING SCHEDULE.

LAND USE	LIMITATION	COMMENTS
CONSTRUCTION AREAS	DISTURBANCE TO BE NO FURTHER THAN 5m (pref.2m) FROM THE EDGE OF ANY ESSENTIAL ENGINEERING ACTIVITY AS SHOWN ON THESE PLANS	ALL SITE WORKERS WILL CLEARLY RECOGNISE THESE ZONES - WHERE APPROPRIATE THE CONSTRUCTION AREAS ARE TO BE IDNTIFIED WITH BARRIER FENCING (UPSLOPE) & SEDIMENT FENCING (DOWNSLOPE) OR SIMILAR MATERIAL.
ACCESS AREAS	LIMITED TO A MAX. WIDTH OF 10m.	THE SITE MGR. SHALL DETERMINE AND MARK THE LOCATION OF THESE ZONES ONSITE. THEY CAN VARY IN POSITION TO BEST CONSERVE THE EXISTING VEGETATION AND PROTECT DOWNSTREAM AREAS WHILE BEING CONSIDERATE OF THE NEEDS OF EFFICIENT WORKS ACTIVITIES. ALL SITE WORKERS SHALL CLEARLY RECOGNISE THEIR BOUNDARIES - WHERE APPROPRIATE THE ACCESS AREAS ARE TO BE MARKED WITH BARRIER MESH, SEDIMENT FENCING OR SIMILAR MATERIALS
REMAINING LANDS	ENTRY PROHIBITED EXCEPT FOR ESSENTIAL THINNING OF PLANT GROWTH.	THINNING OF GROWTH MAY BE REQUIRED FOR FIRE HAZARD REDUCTION

NOTE: WORKS WITHIN WATERWAYS AND CREEKS SHALL BE RESTRICTED AS DIRECTED - ALL LANDS WITHIN CREEKS AND WATERWAYS SHALL HAVE C-FACTORS BELOW 0.05 FROM 1 JAN. TO 15 MAY USING MATERIALS THAT CAN CATER FOR CONCENTRATED FLOWS.

5. WORKS ARE TO BE UNDERTAKEN IN THE FOLLOWING SEQUENCE. EACH SUBSEQUENT STAGE IS NOT TO COMMENCE UNTIL THE PREVIOUS ONE IS COMPLETE.-
a) INSTALL ALL BARRIER AND AND SEDIMENT FENCING WHERE SHOWN ON THE PLAN AND TO DETAIL (SD) 6-8,
b) CONSTRUCT STABILISED SITE ACESS AS SHOWN ON THE PLAN AND TO DETAIL (SD) 6-14,
c) CONSTRUCT LOW FLOW EARTH BANKS WHERE SHOWN ON THE PLAN AND TO DETAIL (SD) 5-5,
d) PROVIDE TEMP. ACCESS TO THE SEDIMENT BASINS AND PROTECT THIS WITH SEDIMENT FENCING (SD) 6-8 OR BARRIER FENCING AND EARTH BANKS (SD) 5-5,
e) PLACE SEDIMENT FENCING (SD) 6-8 DOWNSLOPE OF LANDS TO BE DISTURBED FOR CONSTRUCTION OF SEDIMENT BASINS,
f) CONSTRUCT SEDIMENT BASIN GENERALLY IN ACCORDANCE WITH (SD)6-4,
g) STABILISE LAND SURFACES DISTURBED BY CONSTRUCTION OF THE SEDIMENT BASINS AS SOON AS FINAL LEVELS ARE ESTABLISHED,
h) CLEAR THE SITE AND STRIP AND STOCKPILE THE TOPSOIL IN THE LOCATIONS SHOWN ON THE PLANS OR AS DIRECTED BY THE SITE SUPERINTENDENT TO DETAIL (SD)4-1,
i) UNTERTAKE ALL ESSENTIAL CONSTRUCTION WORKS,
j) INSTALL MESH AND GRAVEL INLET PROTECTION (SD)6-11 FOR ADJACENT KERB INLETS NOT SHOWN,
k) INSTALL GEOTEXTILE INLET FILTERS (SD)6-12 AROUND ALL DROP INLETS ONSITE. (NOT SHOWN),
l) COMPLETE TRIMMING TO FINAL GRADES AND APPLY TURF TO DISTURBED AREAS WITHIN 5 DAYS OF COMPLETION OF CONSTRUCTION WORKS,
m) REMOVE TEMPORARY EROSION CONTROL MEASURES AFTER THE PERMANENT LANDSCAPING HAS BEEN COMPLETED.

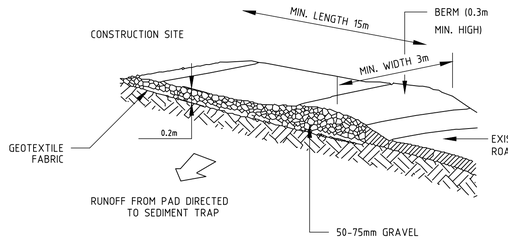

STABILISED SITE ACESS (SD 6-14)

NTS

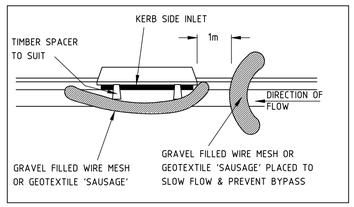

MESH AND GRAVEL INLET FILTER
TYPE A - LINTEL INLET

NTS

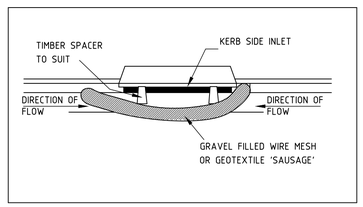

MESH AND GRAVEL INLET FILTER
TYPE B - SAG LINTEL INLET

NTS

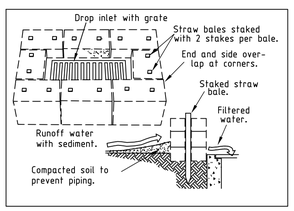

STRAW BALE DROP INLET
SEDIMENT TRAP

NTS

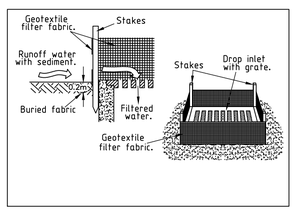

GEOTEXTILE FILTER FABRIC
DROP INLET SEDIMENT TRAP

NTS

6. CLEARLY VISIBLE BARRIER FENCING SHALL BE INSTALLED WHERE DIRECTED BY THE SITE SUPERINTENDENT TO CONTROL AND PROHIBIT UNNECESSARY SITE DISTURBANCE.

7. EARTH BATTERS SHALL BE CONSTRUCTED WITH AS LOW A GRADIENT AS PRACTICABLE BUT NO STEEPER THAN:
a) 2(h) - 1(v) WHERE SLOPE LENGTH IS LESS THAN 7m
b) 2.5(h) - 1(v) WHERE SLOPE LENGTH IS BETWEEN 7m AND 10m
c) 3(h) - 1(v) WHERE SLOPE LENGTH IS BETWEEN 10m AND 12m
d) 4(h) - 1(v) WHERE SLOPE LENGTH IS BETWEEN 12m AND 18m
e) 5(h) - 1(v) WHERE SLOPE LENGTH IS BETWEEN 18m AND 27m
f) 6(h) - 1(v) WHERE SLOPE LENGTH IS GREATER THAN 27m

SLOPE LENGTHS CAN BE SHORTENED BY USING LOW FLOW EARTH BANKS AS CATCH DRAINS ABOVE THE EARTH BATTER AREA.

8. PROTECTION FROM EROSIVE FORCES SHALL BE UNDERTAKEN ON ALL LANDS TO MEET THE REQUIREMENTS OF TABLE 9-7 'MAXIMUM ACCEPTABLE C-FACTORS AT NOMINATED TIMES DURING WORKS' FROM 'MANAGING URBAN STORMWATER - SOILS AND CONSTRUCTION 3RD EDITION'

9. TEMPORARY GROUND COVER IN SHEET FLOW AREAS IS TO BE IN ACCORDANCE WITH TABLE 9-7 'PLANT SPECIES FOR GROUND COVER' FROM ' MANAGING URBAN STORMWATER - SOILS AND CONSTRUCTION 3RD EDITION'. WHERE PRACTICAL FOOT AND VEHICULAR TRAFFIC SHALL BE KEPT AWAY FROM REHABILITATION AREAS.

10. WHERE POSSIBLE THE CONSTRUCTION PROGRAM IS TO BE SCHEDULED SO THAT THE TIME FROM STARTING LAND DISTURBANCE ACTIVITIES TO STABILISATION IS A DURATION OF LESS THAN 6 MONTHS THIS MEANS ACHIEVING A C-FACTOR OF LESS THAN 0.1 AND SETTING IN MOTION A PROGRAM THAT ENSURES THAT IT DROPS PERMANENTLY, (BY VEGETATION, PAVING, ARMOURING etc.) TO LESS THAN 0.05 WITHIN A FURTHER 60 DAYS. LOCAL WATER RESTRICTIONS PERMITTING. LANDS THAT HAVE BEEN NEWLY PLANTED WITH GRASS SPECIES SHALL BE WATERED REGULARLY UNTIL AN EFFECTIVE COVER HAS BEEN ESTABLISHED AND PLANTS ARE GROWING VIGOROUSLY. FOLLOW-UP SEED AND FERTILISER SHALL BE APPLIED AS NECESSARY IN AREAS OF MINOR SOIL EROSION AND/OR INADEQUATE VEGETATIVE PROTECTION. NOTWITHSTANDING THIS SCHEDULE OF WORKS SO THAT THE DURATION FROM THE CONCLUSION OF LAND SHAPING TO THE COMPLETION OF FINAL STABILISATION IS LESS THAN 20 WORKING DAYS.

11. THE VEGETATION SHALL BE AIMED AT RE-ESTABLISHING NATURAL SPECIES. THEREFORE, THE NATURAL SURFACE SOILS SHALL BE REPLACED AND NON PERSISTENT ANNUAL COVER CROPS SHALL BE USED.

12. SEDIMENT FENCES (SD)6-8 SHALL:

a) BE INSTALLED WHERE SHOWN ON THE PLAN AND AS DIRECTED AT THE DISCRETION OF THE SITE SUPERINTENDENT DURING THE COURSE OF CONSSTRUCTION TO CONTAIN THE COARSER SEDIMENT FRACTIONS AS NEAR AS POSSIBLE TO THEIR SOURCE.
b) HAVE A CATCHMENT AREA NOT EXCEEDING 720sq.m. AND A STORAGE DEPTH OF AT LEAST 0.6m.
c) PROVIDE AN UPSLOPE RETURN OF 1m AT INTERVALS ALONG THE FENCE WHERE THE CATCHMENT AREA EXCEEDS 720sq.m. TO LIMIT THE DISCHARGE REACHING EACH SECTION TO 40litres/sec IN A MAX. 20yr Tc DISCHARGE.

13. STOCKPILES (SD) 4-1 SHALL BE LOCATED AS SHOWN ON THE PLANS AND AT DISCRETION OF THE SITE SUPERINTENDENT.

14. DURING WINDY WEATHER LARGE UNPROTECTED AREAS ARE TO BE KEPT MOIST (NOT WET) BY SPRINKLING WITH WATER TO KEEP DUST UNDER CONTROL. IN THE EVENT WATER IS NOT AVAILABLE IN SUFFICENT QUANTITIES SOIL BINDERS AND/OR DUST RETARDENTS SHALL BE USED OR THE SURFACE SHALL BE LEFT IN A CLODDY STATE THAT RESISTS REMOVAL BY WIND.

15. NOTWITHSTANDING NOTE 5d STOCKPILES SHALL NOT BE LOCATED WITHIN 5m OF HAZARD AREAS, INCLUDING LIKELY AREAS OF HIGH VELOCITY FLOWS SUCH AS WATERWAYS, PAVED AREAS OR DRIVEWAYS.

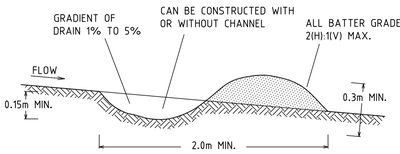

EARTH BANK (LOW FLOW) (SD 5-5)

NTS

NOTE:
ONLY TO BE USED AS TEMPORARY BANK WHERE MAXIMUM UPSLOPE LENGTH IS 80m.

CONSTRUCTION NOTES
1. BUILD WITH GRADIENTS BETWEEN 1 PERCENT AND 5 PERCENT.
2. AVOID REMOVING TREES AND SHRUBS IF POSSIBLE - WORK AROUND THEM.
3. ENSURE THE STRUCTURES ARE FREE OF PROJECTIONS OR OTHER IRREGULARITIES THAT COULD IMPEDE WATER FLOW.
4. BUILD THE DRAINS WITH CIRCULAR, PARABOLIC OR TRAPEZOIDAL CROSS SECTIONS, NOT V-SHAPED
5. ENSURE THE BANKS ARE PROPERLY COMPACTED TO PREVENT FAILURE.
6. COMPLETE PERMANENT OR TEMPORARY STABILISATION WITHIN 10 DAYS OF CONSTRUCTION.

CATCHMENT PLAN

NTS

16. SEDIMENT REMOVED FROM ANY TRAPPING DEVICE SHALL BE DISPOSED IN LOCATIONS WHERE FURTHER EROSION AND CONSEQUENT POLLUTION TO DOWNSLOPE LANDS AND WATERWAYS SHALL NOT OCCUR

17. WATER SHALL BE PREVENTED FROM DIRECTLY ENTERING THE PERMANENT DRAINAGE SYSTEM UNLESS IT IS RELATIVELY SEDIMENT FREE (ie THE CATCHMENT HAS BEEN LANDSCAPED AND/OR ANY LIKELY SEDIMENT HAS BEEN TREATED IN AN APPROVED DEVICE) NEVERTHELESS STORMWATER INLETS SHALL BE PROTECTED (SD)6-11 & 6-12

18. TEMPORARY SOIL AND WATER MANAGEMENT STRUCTURES SHALL BE REMOVED ONLY AFTER THE LANDS THEY ARE PROTECTING ARE STABILISED

19. ACCEPTABLE BINS SHALL BE PROVIDED FOR ANY CONCRETE AND MORTAR SLURRIES, PAINTS, ACID WASHINGS, LIGHTWEIGHT WASTE MATERIALS AND LITTER. CLEARANCE SERVICES SHALL BE PROVIDED AT LEAST ONCE A WEEK.

SITE INSPECTION AND MAINTENANCE

20. A SELF AUDITING PROGRAM SHALL BE ESTABLISHED BASED ON A CHECK SHEET. A SITE INSPECTION USING THE CHECK SHEET SHALL BE MADE BY THE SITE MANAGER:-
a) AT LEAST WEEKLY
b) IMMEADIATELY BEFORE SITE CLOSURE
c) IMMEADIATELY FOLLOWING RAINFALL EVENTS IN EXCESS OF 5mm IN ANY 24hr PERIOD. THE SELF AUDIT SHALL INCLUDE:-
a) RECORDING THE CONDITION OF EVERY 'BEST MANAGEMENT PRACTICE'
c) RECORDING MAINTENANCE REQUIREMENTS (IF ANY) FOR EACH 'BEST MANAGEMENT PRACTICE'
d) RECORDING THE SITE WHERE SEDIMENT IS DISPOSED
e) FORWARDING A SIGNED DUPLICATE OF THE COMPLETED CHECK SHEET TO THE PROJECT MANAGER/DEVELOPER FOR THEIR INFORMATION.

21. IN ADDITION A SUITABLY QUALIFIED PERSON SHALL BE RESPONSIBLE FOR OVERSEEING THE INSTALLATION AND MAINTENANCE OF ALL SOIL AND WATER MANAGEMENT WORKS IN THE SITE. THE PERSON SHALL BE REQUIRED TO SPEND A MIN. OF:-
a) 2hrs ONSITE EACH FORTNIGHT UP UNTIL COMPLETION OF ROAD AND DRAINAGE WORKS AND/OR THE COMMISIONING OF SEDIMENT BASINS/WATER QUALITY CONTROL FACILITES AND DURING THE DECOMMISIONING OF SAME AND/OR FINAL SITE STABILISATION. TO PROVIDE A SHORT MONTHLY WRITTEN REPORT.
b) ONE HOUR ONSITE EACH 2 MONTHS DURING THAT PHASE WHERE THE DEVELOPERS RESPONSIBILITIES ARE LIMITED TO MAINTENANCE OF THE SEDIMENT DEVICES AND/OR SEDIMENT BASINS (ie DURING THE STAGE WHEN BUILDING WORKS CAN BE UNDERTAKEN TO PROVIDE A SHORT WRITTEN REPORT EACH 4 mths.
THE RESPONSIBLE PERSON SHALL ENSURE THAT:-
a) THIS PLAN IS BEING IMPLEMENTED CORRECTLY
b) REPAIRS ARE BEING UNDERTAKEN AS REQUIRED
c) ESSENTIAL MODIFICATIONS TO THIS PLAN ARE MADE IF AND WHEN NECESSARY AND EACH REPORT SHALL CERTIFY THAT WORKS HAVE BEEN CARRIED OUT ACCORDING TO THE APPROVED PLANS.

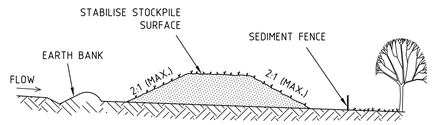

STOCKPILES (SD 4-1)

NTS

CONSTRUCTION NOTES
1. PLACE STOCKPILES MORE THAN 2 (PREFERABLY 5) METRES FROM EXISTING VEGETATION, CONCENTRATED WATER FLOW, ROADS AND HAZARD AREAS.
2. CONSTRUCT ON THE CONTOUR AS LOW, FLAT, ELONGATED MOUNDS.
3. WHERE THERE IS SUFFICIENT AREA, TOPSOIL STOCKPILES SHALL BE LESS THAN 2 METRES IN HEIGHT.
4. WHERE THEY ARE TO BE IN PLACE FOR MORE THAN 10 DAYS, STABILISE FOLLOWING THE APPROVED ESCP OR SWMP TO REDUCE THE C-FACTOR TO LESS THAN 0.10.
5. CONSTRUCT EARTH BANKS (STANDARD DRAWING 5-5) ON THE UPSLOPE SIDE TO DIVERT WATER AROUND STOCKPILES AND SEDIMENT FENCES (STANDARD DRAWING 6-8) 1 TO 2 METRES DOWNSLOPE.

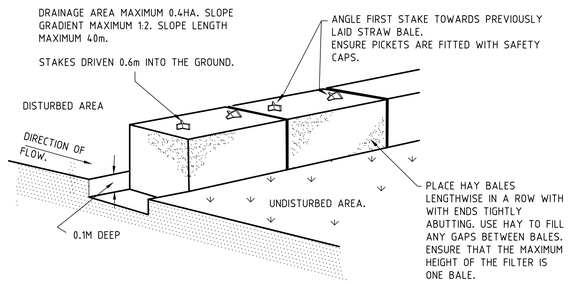

STRAW BALE SEDIMENT FILTER

NTS

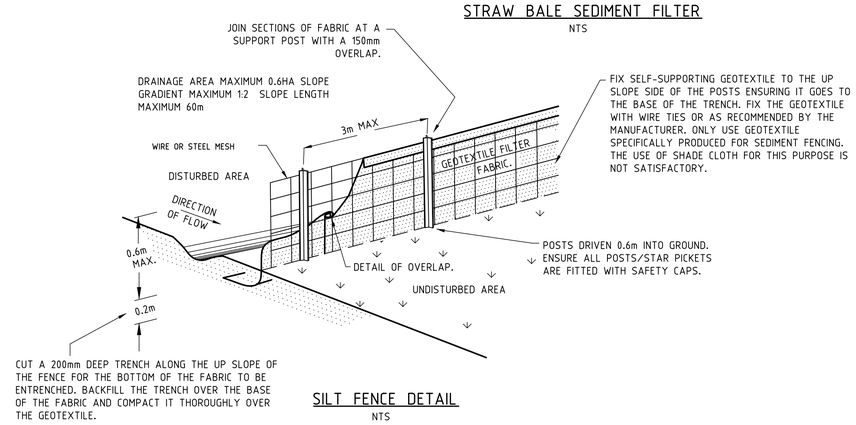

SILT FENCE DETAIL

NTS

24. WASTE BINS SHALL BE EMPTIED AS NECESSARY. DISPOSAL OF WASTE SHALL BE IN A MANNER APPROVED BY THE SITE SUPERINTENDENT.

25. PROPER DRAINAGE OF THE SITE SHALL BE MAINTAINED. TO THIS END DRAINS (INCLUDING INLET AND OUTLET WORKS) SHALL BE CHECKED TO ENSURE THAT THEY ARE OPERATING AS INTENDED, ESPECIALLY THAT:-
a) NO LOW POINTS EXIST WHICH CAN OVERTOP IN LARGE STORM EVENTS.
b) AREAS OF EROSION ARE REPAIRED (eg LINED WITH SUITABLE MATERIAL) AND/OR VELOCITY OF FLOW IS REDUCED APPROPRIATELY THROUGH CONSTRUCTION OF SMALL CHECK DAMS OR INSTALLING ADDITIONAL DIVRESIONS UPSLOPE.
c) BLOCKAGES ARE CLEARED (THESE MIGHT OCCUR BECAUSE OF SEDMINET POLLUTIONS, SAND/SOIL/SPOIL BEING DEPOSITED IN OR TOO CLOSE TO THEM, BREACHED BY VEHICLE WHEELS etc)

26. SAND/SOIL/SPOIL MATERIAL PLACED CLOSER THAN 2m FROM HAZARD AREAS SHALL BE REMOVED, SUCH HAZARD AREAS INCLUDE ANY AREAS OF HIGH VELOCITY WATER FLOWS (eg WATERWAYS AND GUTTERS) PAVED AREAS AND DRIVEWAYS.

27. RECENTLY STABILISED LANDS SHALL BE CHECKED TO ENSURE THAT THE EROSION HAZARD HAS BEEN EFFECTIVELY REDUCED. ANY REPAIRS SHALL BE INITIATED AS APPROPRIATE.

28. EXCESSIVE VEGETATION GROWTH SHALL BE CONTROLLED THROUGH MOWING OR SLASHING.

29. ALL SEDIMENT DETENTION SYSTEMS SHALL BE KEPT IN GOOD WORKING CONDITION. IN PARTICULAR ATTENTION SHALL BE GIVEN TO.-
a) RECENT WORKS TO ENSURE THAT THEY HAVE NOT RESULTED IN DIVERSION OF SEDIMENT LADEN WATER AWAY FROM THEM.
b) DEGRADEABLE PRODUCTS TO ENSURE THAT THEY ARE REPLACED AS REQUIRED
c) SEDIMENT REMOVAL TO ENSURE THE DESIGN CAPACITY OR LESS REMAINS IN THE SETTLING ZONE.

30. ADDITIONAL EROSION AND/OR SEDIMENT CONTROL WORKS SHALL BE CONSTRUCTED AS MIGHT BECOME NECESSARY TO ENSURE THE DESIRED PROTECTION IS GIVEN TO DOWNSLOPE LANDS AND WATERWAYS (ie MAKE ONGOING CHANGES TO THIS PLAN WHERE IT PROVES INADEQUATE IN PRACTICE OR IS SUBJECTED TO CHANGES IN CONDITIONS AT THE WORKS SITE OR ELSEWHERE IN THE CATCHEMNT.

31. EROSION AND SEDIMENT CONTROL MEASURES SHALL BE MAINTAINED IN A FUNCTIONING CONDITION UNTIL ALL EARTHWORKS ACTIVITIES ARE COMPLETED AND THE SITE STABLISED.

32. LITTER, DEBRIS AND COARSE SEDIMENT SHALL BE REMOVED FROM THE GROSS POLLUTANT TRAPS AND TRASH RACKS AS REQUIRED.

33. PROVIDE OFF-STREAM SEDIMENT CONTROL PONDS PRIOR TO DISCHARGE OF RUN-OFF. PLACE A LEVEL INDICATOR WITHIN THE POND SHOWING 10% CAPACITY AND 20% CAPACITY. CLEAN OUT SEDIMENT WHEN ABOVE 10% CAPACITY AND REMOVE FROM SITE TO COUNCIL APPROVED LOCATION. CLARIFY AND PUMP OUT WATER WHEN ABOVE 20% CAPACITY SO RUN-OFF FROM THE NEXT RAIN EVENT CAN BE CAPTURED.

34. DISCHARGE FROM SEDIMENT CONTROL PONDS IS ONLY ALLOWED WHEN WATER PH IS 6.5-8.5, IS CLARIFIED BELOW 60mg/L SUSPENDED SOLIDS (SONTU) AND WITH THE PRIOR APPROVAL OF THE EPA.

35. MAINTAIN TEMPORARY SEDIMENT CONTROL PONDS UNTIL AT LEAST 85% OF THE PROJECT WORKS ARE COMPLETE OR WHEN ALL DISTURBED AREAS ARE STABILISED.

AIR & NOISE POLLUTION CONTROL

1. SUPPRESS DUST BY THE FOLLOWING METHODS WHERE APPLICABLE:
a) STAGE WORKS TO LIMIT THE EXTENT OF EXPOSED AND UNPROTECTED AREAS.
b) CONDUCT REGULAR SPRAYING OF WATER.
c) COVER AND SECURE VEHICULAR LOADS ENTERING/EXITING THE SITE.
d) USE AN ENVIRONMENTALLY FRIENDLY CHEMICAL SPRAY TO BIND SOIL TOGETHER THUS STABILISING UNUSED SOIL.
e) RESTRICT SPEED OF VEHICLES ONSITE.
f) COVER STOCKPILES TO PROTECT THEM FROM WIND.
g) PROVIDE 1.8m HIGH DUST SCREENS; SHADE CLOTH, PVC BANNER OR POLYESTER MESH; SECURELY FIXED TO PERIMETER FENCE.

2. IMPLEMENT MEASURES TO LIMIT AIR POLLUTION BY VEHICLES AND PLANT WORKING ON OR PASSING THROUGH THE SITE.

3. MAINTAIN POLLUTION CONTROL MEASURES DURING CONSTRUCTION AND UNTIL FULL STABILISATION. ROUTINELY INSPECT EACH WEEK AND AFTER SIGNIFCANT RAINFALL EVENTS. REPAIR AND REINSTATE WORKS AS NEEDED TO MAINTAIN PROTECTION. RECORD MAINTENANCE ACTIVITIES AND DETAILS AND PROVIDE TO EPA FOR INSPECTION WHEN REQUESTED.

CONSTRUCTION NOTES

1. REMOVE ANY ROCKS, CLODS, STICKS OR GLASS FROM SURFACE BEFORE LAYING MATTING.

2.TOPSOIL TO BE MINIMUM 75mm DEEP.

3. FERTILISING AND SEEDING TO BE COMPLETED BEFORE MATTING.

4. ENSURE FABRIC IS CONTINUOUSLY IN CONTACT WITH THE SOIL GRADING THE SURFACE CAREFULLY.

5. LAY IN 'SHINGLE-FASION' WITH THE END OF THE UPSTREAM ROLL OVERLAPPING THE NEXT ROLL PLACED.

6. FULL WIDTH OF FLOW IN CHANNEL TO BE COVERED BY MATTING

7. WATER TO BE DIVERTED AWAY FROM TREATED SLOPES UNTIL VEGETATION IS ESTABLISHED UNLESS CHANNEL IS SPRAYED WITH A SLOW-SETTING ANIONIC SOIL BINDER.

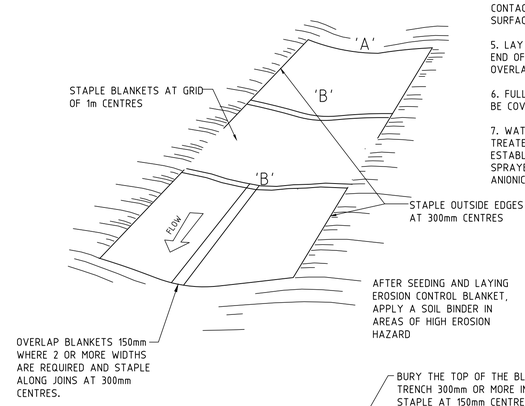

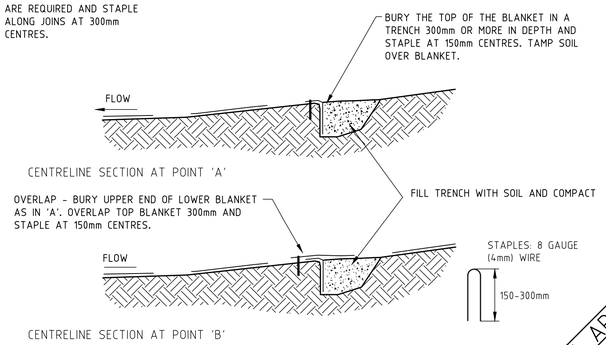

JUTE MATTING DETAIL

NTS

FOR CC APPROVAL

THIS DRAWING AND THE CONCEPTS CONTAINED THEREIN ARE THE PROPERTY OF WESTLAKE PUNNETT & ASSOCIATES PTY. LTD. NO UNAUTHORISED COPYING IS PERMITTED. NO STRUCTURE IS TO BE CONSTRUCTED BASED ON THIS DRAWING, OR PART OF THIS DRAWING, WITHOUT THE WRITTEN PERMISSION OF WESTLAKE PUNNETT & ASSOCIATES PTY. LTD. ALL DIMENSIONS SHALL BE VERIFIED ON SITE. WHERE DIMENSIONS DIFFER FROM THOSE SHOWN ON ARCHITECTURAL DETAILS, DIRECTION SHALL BE OBTAINED FROM WESTLAKE PUNNETT & ASSOCIATES P/L. DO NOT SCALE - NO RESPONSIBILITY WILL BE TAKEN BY WESTLAKE PUNNETT & ASSOCIATES P/L FOR ANY DISCREPANCIES CAUSED BY SCALING THESE DRAWINGS.

Rev.	Amendments	Approved	Date

WESTLAKE PUNNETT
office@westlakepunnett.com.au
PO Box 1573 NOWRA 2541

CIVIL & STRUCTURAL ENGINEERS
WWW.WESTLAKEPUNNETT.COM.AU
WOLLONGONG (02) 4211 0393
NOWRA (02) 4423 5533
ULLADULLA (02) 4455 4397
RESIDENTIAL - COMMERCIAL - INDUSTRIAL

SEDIMENT EROSION CONTROL DETAILS

PROJECT: VIEWING PLATFORM & CARPARK
AT: SURFERS AVENUE, NARRAWALLEE
FOR: SHOALHAVEN CITY COUNCIL

Design: J.Taylor
Drawn: J.Taylor
Checked: S.Punnett
Date: 17/10/2022
Drawing No. 22142/C05
Rev –

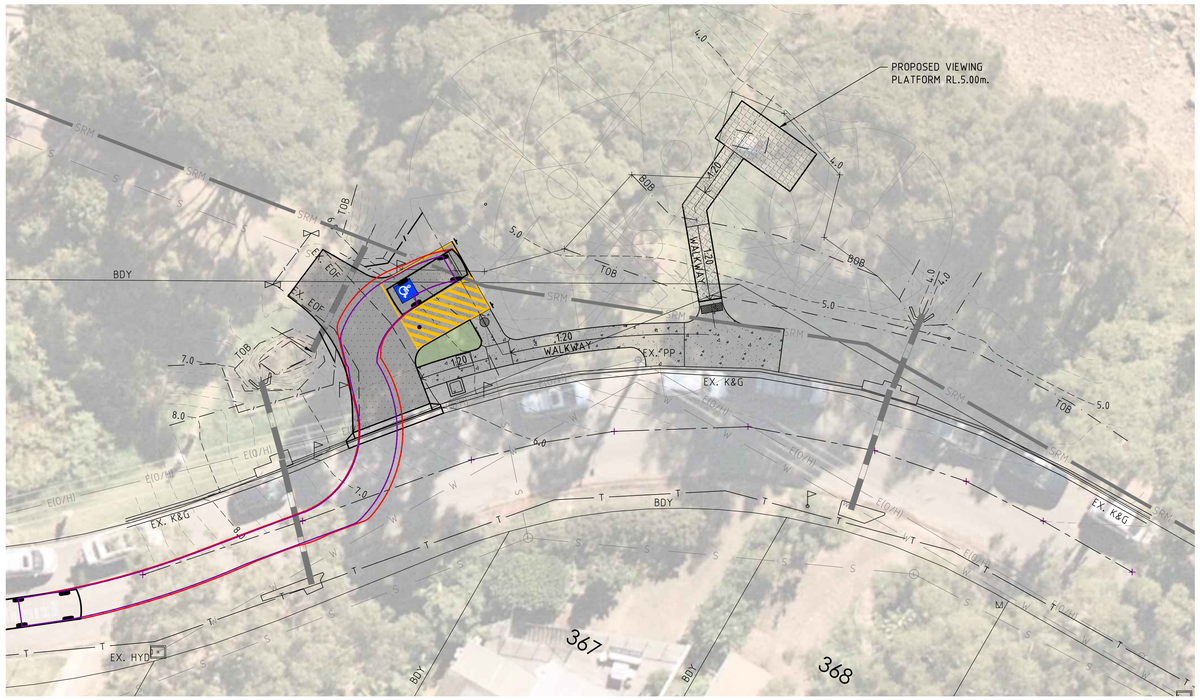

TURNING PATH PLAN 1
B99 VEHICLE ENTERING SITE FROM WEST
SCALE 1:100

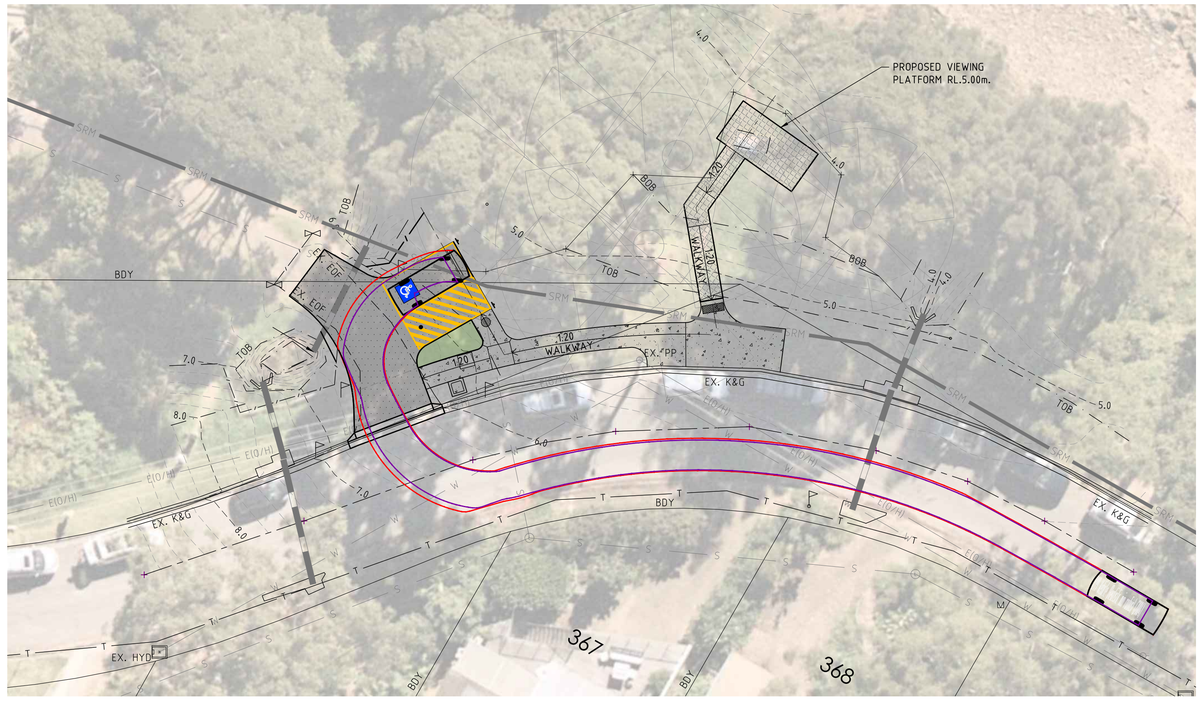

TURNING PATH PLAN 2
B99 VEHICLE ENTERING SITE FROM EAST
SCALE 1:100

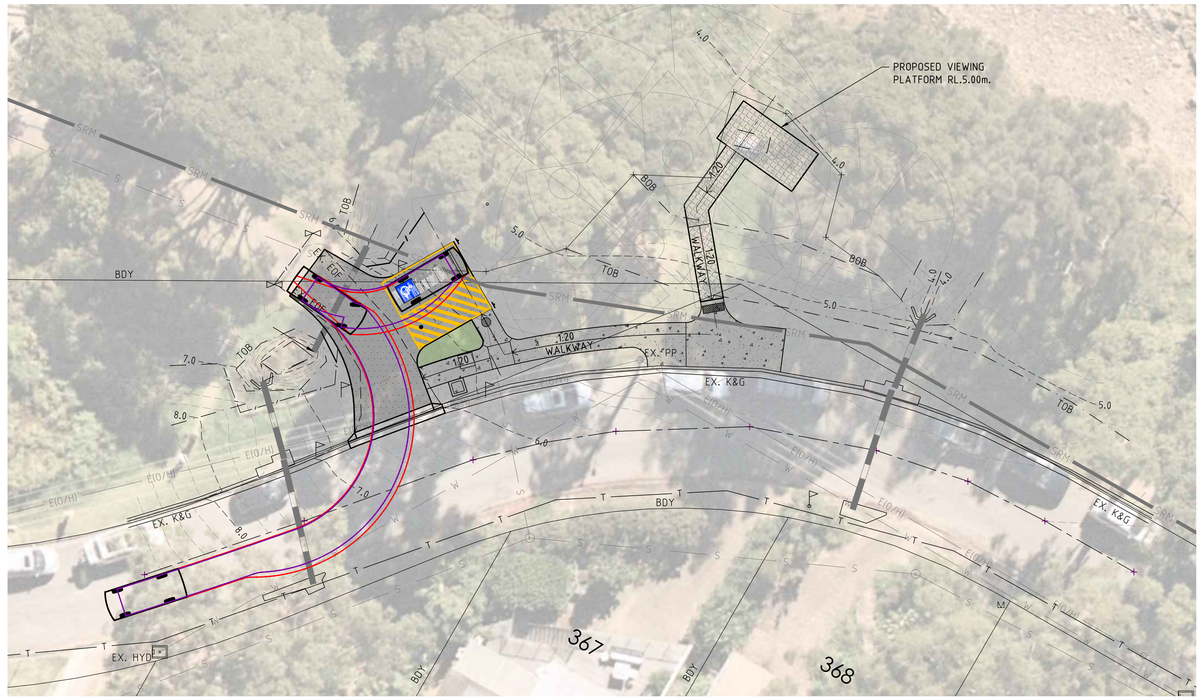

TURNING PATH PLAN 3
B99 VEHICLE EXITING SITE
SCALE 1:100

FOR CC APPROVAL

www.dialbeforeyoudig.com.au
DIAL 1100
BEFORE YOU DIG

NOT ALL SERVICES ARE SHOWN. SERVICES ARE TO BE POT HOLED PRIOR TO COMMENCEMENT OF WORKS AND CLEARANCE REQUIREMENT DISCUSSED WITH WESTLAKE PUNNETT & THE SERVICE PROVIDERS.

UNDERGROUND SERVICES SEARCH SHOULD BE UNDERTAKEN PRIOR TO ANY EXCAVATION TAKING PLACE UPON THE SITE

0 1 2 4 6 8 10m
SCALE 1:100 (A1), 1:200 (A3)

THIS DRAWING AND THE CONCEPTS CONTAINED THEREIN ARE THE PROPERTY OF WESTLAKE PUNNETT & ASSOCIATES PTY. LTD. NO UNAUTHORISED COPYING IS PERMITTED. NO STRUCTURE IS TO BE CONSTRUCTED BASED ON THIS DRAWING, OR PART OF THIS DRAWING, WITHOUT THE WRITTEN PERMISSION OF WESTLAKE PUNNETT & ASSOCIATES PTY. LTD. ALL DIMENSIONS SHALL BE VERIFIED ON SITE. WHERE DIMENSIONS DIFFER FROM THOSE SHOWN ON ARCHITECTURAL DETAILS, DIRECTION SHALL BE OBTAINED FROM WESTLAKE PUNNETT & ASSOCIATES P/L. DO NOT SCALE - NO RESPONSIBILITY WILL BE TAKEN BY WESTLAKE PUNNETT & ASSOCIATES P/L FOR ANY DISCREPANCIES CAUSED BY SCALING THESE DRAWINGS.

Rev.	Amendments	Approved	Date

WESTLAKE PUNNETT
office@westlakepunnett.com.au
PO Box 1573 NOWRA 2541

CIVIL & STRUCTURAL ENGINEERS
WWW.WESTLAKEPUNNETT.COM.AU
WOLLONGONG (02) 4211 0393
NOWRA (02) 4423 5533
ULLADULLA (02) 4455 4397
RESIDENTIAL - COMMERCIAL - INDUSTRIAL

VEHICLE TURNING PATH PLAN

PROJECT: VIEWING PLATFORM & CARPARK
AT: SURFERS AVENUE, NARRAWALLEE
FOR: SHOALHAVEN CITY COUNCIL

Design: J.Taylor
Drawn: J.Taylor
Checked: S.Punnett
Date: 17/10/2022
Drawing No. 22142/C06
Rev –

WESTLAKE PUNNETT

ABN 38 120 322 536

WESTLAKE PUNNETT & ASSOCIATES PTY LTD
CIVIL & STRUCTURAL ENGINEERS

WOLLONGONG	NOWRA	ULLADULLA
4211 0393	4423 5533	4455 4397

Email: office@westlakepunnett.com.au
PO Box 1573 NOWRA 2541

STRUCTURAL DETAILS

CLIENT:	SHOALHAVEN CITY COUNCIL
PROJECT:	VIEWING PLATFORM & CARPARK
ADDRESS:	SURFERS AVENUE NARRAWALLEE
JOB REF:	22142
ISSUED DATE:	17TH OCTOBER 2022

SIGNED: _____

David Freeman
BE Civil Scholar (Hons)
MIEAust CPEng NER
APEC Engineer IntPE(Aus)

GENERAL STRUCTURAL NOTES

GENERAL

1. THESE DRAWINGS SHALL BE READ IN CONJUNCTION WITH ALL ARCHITECTURAL AND OTHER CONSULTANTS DRAWINGS AND SPECIFICATIONS. ANY DISCREPANCY SHALL BE REFERRED TO THE ENGINEER BEFORE PROCEEDING WITH THE WORK.
2. DIMENSIONS ARE NOT TO BE SCALED FROM THESE DRAWINGS.
3. THE ENGINEER IS TO INSPECT ALL WORK PRIOR TO THE POURING OF CONCRETE. PROVIDE 48 HOURS NOTICE FOR ALL INSPECTIONS.
4. THE STRUCTURE HAS BEEN DESIGNED FOR THE FOLLOWING LOADS.

- WIND LOADS DETERMINED IN ACCORDANCE WITH AS1170.2 BASED UPON A BASIC WIND VELOCITY OF 45m/s AND TERRAIN CATEGORY 1 (REFER TO DESIGN LOADS).
- THE STRUCTURES DETAILED ON THESES DRAWINGS ARE SUITABLE FOR LOADS IN ACCORDANCE WITH TABLE L1.

EARTHWORKS

5. UNLESS NOTED OTHERWISE EARTHWORKS ARE TO BE IN ACCORDANCE WITH THE GEOTECHNICAL REPORT BY DOUGLAS PARTNERS REF. 78319.02 DATED AUGUST 2022.
6. **SITE DRAINAGE DURING CONSTRUCTION:** DURING CONSTRUCTION WATER RUNOFF SHALL BE COLLECTED AND CHANNELED AWAY FROM PAVING WORKS & STRUCTURES.

CONCRETE WORKS

7. ALL WORK TO BE INSPECTED BY THE ENGINEER PRIOR TO POURING.
8. **ALL CONCRETE IS TO HAVE 100mm SLUMP AND 20mm AGGREGATE UNLESS NOTED OTHERWISE. CONCRETE STRENGTH AND COVER ARE TO BE SHOWN IN TABLE S1 UNLESS NOTED OTHERWISE.**
9. ALL CONCRETE IS TO BE COMPACTED WITH A MECHANICAL VIBRATOR IN ACCORDANCE WITH AS3600.
10. ALL CONCRETE IS TO BE CURED IN ACCORDANCE WITH AS3600.

TABLE S1

ELEMENT	COVER (mm)			STRENGTH (MPa)
	TOP	BOTTOM	SIDES	
PIERS (REINFORCED)	30	40	40	25

REINFORCING NOTES

11. ALL REINFORCING BARS ARE TO BE D500 GRADE BARS UNLESS NOTED OTHERWISE. ALL REINFORCING MESH IS TO BE D500L UNLESS NOTED OTHERWISE.
12. SPLICES IN REINFORCING BARS ARE TO LAP MIN 500mm UNLESS NOTED OTHERWISE.

PIER NOTE

13. PIERS ARE TO BE CLEANED OUT OF ALL LOOSE MATERIAL PRIOR TO INSPECTION BY THE ENGINEER. IN ADDITION THE CONTRACTOR IS TO ENSURE THAT ALL LOOSE MATERIAL IS REMOVED IMMEDIATELY PRIOR TO POURING. ALL PIERS ARE TO BE INSPECTED AND AFFIRMED BY THE ENGINEER PRIOR TO POURING.

SEWER NOTE

1. IT IS THE RESPONSIBILITY OF THE BUILDER TO CHECK FOR ANY SEWER MAINS OR OTHER SERVICES LOCATED WITHIN THE ZONE OF INFLUENCE OF THE BUILDING, AND ADVISE THE ENGINEER OF THEIR PRESENCE.

ARCHITECTURAL PLAN NOTE

2. THIS DESIGN IS BASED UPON THE ARCHITECTURAL DRAWINGS BY SHOALHAVEN CITY COUNCIL REF. 5554_01 DATED JUNE 2020. IF ANY CHANGES ARE MADE TO THE ARCHITECTURAL PLANS WHICH ALTER THE GEOMETRY OR LOADING OF THE STRUCTURE SHOWN THEN REFER TO THE ENGINEER FOR ADVICE.

GEOTECHNICAL NOTE

3. THE FOOTINGS HAVE BEEN DESIGNED BASED UPON THE GEOTECHNICAL REPORT BY DOUGLAS PARTNERS REF. 78319.02 DATED AUGUST 2022.

EPOXY NOTE

4. UNLESS OTHERWISE NOTED ALL EPOXY FOR CHEMICAL ANCHORING SHALL BE RAMSET CHEMSET 801.

SITE MAINTENANCE

5. SITE MAINTENANCE MEASURES SHALL BE ADHERED TO AS RECOMMENDED BY DOUGLAS PARTNERS REF. 78319.02 DATED AUGUST 2022 SECTION 9.3

STAINLESS STEEL GENERAL NOTES:

1. STAINLESS STEEL MATERIAL SHALL NOT BE STORED WITH CARBON STEEL.
2. TOOLS USED FOR CARBON STEEL SHALL NOT BE USED TO FABRICATE OR ASSEMBLE STAINLESS STEEL COMPONENTS. WORK AREAS FOR STAINLESS STEEL SHALL BE ISOLATED FROM THOSE WHERE CARBON STEEL IS PROCESSED TO AVOID CONTAMINATION DUST OR DEBRIS.
3. STAINLESS STEEL SHALL BE MARKED USING XYLENE FREE PENS ONLY.
4. STAINLESS STEEL SHALL NOT BE STORED IN CONTACT WITH TANALISED WOODS.
5. THE STAINLESS STEEL SHALL BE WRAPPED OR OTHERWISE PROTECTED DURING TRANSPORT TO AVOID CONTAMINATION BY FERROUS PRODUCTS. IF A PLASTIC COATING IS USED ALL TRACES OF ADHESIVE SHALL BE REMOVED ON REMOVAL OF THE PLASTIC.
6. SURFACE FINISHED OF WELDS SHALL BE GRADE 1. POLISH USING 320 GRIT OR FINER SILICON CARBIDE ABRASIVE WITH LUBRICATION. AFTER POLISHING, WELDS SHALL BE PASSIVATED USING A 20% TO 25% NITRIC ACID SOLUTION TO THE GROUND/POLISHED AREA IN ACCORDANCE WITH ASTM A380 FOR AT LEAST 30 MINUTES AT 40°C TO 50°C.
7. ALL STAINLESS STEEL COMPONENTS SHALL HAVE A Ra,0.5mm AND BE PASSIVATED USING A 20% TO 25% NITRIC ACID SOLUTION FOR AT LEAST 30 MINUTES AT 40°C TO 50°C IN ACCORDANCE WITH ASTM A380.
8. ALL EXPOSED EDGES SHALL HAVE 2.5mm RADIUS.

DESIGN LOADS

SUPERIMPOSED LOADS ARE GENERALLY IN ACCORDANCE WITH AS1170.1, AND AS NOTED BELOW UNLESS MORE STRINGENT REQUIREMENTS ARE SPECIFIED ELSEWHERE IN THE DOCUMENTATION.

TABLE L1

LOCATION	LIVE LOAD (kPa)	LATERAL LOAD (kPa)
ELEVATED WALKWAY	3	0.25
VIEWING PLATFORM	4	0.25

WIND LOADS ARE IN ACCORDANCE WITH AS1170.2 AND AS FOLLOWS:

- WIND REGION - A2
- TERRAIN CATEGORY - TC1
- IMPORTANCE LEVEL - 2
- ANNUAL PROBABILITY OF EXCEEDANCE - 1/500
- REGIONAL WIND VELOCITY (VR) - 45 m/s

COMPOSITE FIBRE NOTES:

1. ALL MATERIAL AND WORKMANSHIP SHALL COMPLY WITH WAGNERS COMPOSITE FIBRE TECHNOLOGIES MANUFACTURING WORK INSTRUCTIONS AND QUALITY ASSURANCE STANDARDS.
2. UNLESS OTHERWISE NOTES OR APPROVED, COMPOSITE MATERIALS FOR USE IN THIS PROJECT SHALL BE MANUFACTURED FROM ECR GLASS AND VINYL ESTER RESIN CONFORMING WITH ISO 9001 STANDARD.
3. ALL MEMBERS SHALL BE IN SOUND CONDITION FREE FROM PITTING, DE-LAMINATIONS AND OTHER DEFECTS WHICH ARE LIKELY TO IMPAIR THE STRUCTURAL CAPACITY OF THE MEMBERS.
4. ALL COMPOSITE MEMBER PARTS OF THE HANDRAIL SYSTEM SHALL BE PAINTED USING URETHANE COATING TO PROVIDE EXTRA UV-RESISTENCE. COATING PROCEDURE SHALL BE IN ACCORDANCE WITH WAGNERS PPG GUIDE APPLICATION OF PROTECTIVE COATINGS.
5. AT ALL FACTORY AND AT SITE DRILLED HOLES, A WAGNER CFT ANTICRUSH INSERT SHALL BE PUSHED TO THE CORRECT PLACEMENT. THIS PREVENTS CRUSHING OF THE SECTION AND PROVIDES A LARGE BEARING AREA FOR STRUCTURAL BOLTS.
6. AN ALTERNATIVE METHOD FOR ANTI-CRUSHING IS TO BOLT THROUGH ONE SIDE WALL OF THE PROFILE ONLY. TO PROVIDE ACCESS TO THIS BOLT, A ∅40 ACCESS HOLE IN THE WALL THAT IS NOT BEING BOLTED IS REQUIRED.
7. USE OF A WATERPROOFING COMPOUND TO SEAL ANY END CUT FIBRES, AS A RESULT OF DRILLING OR CUTTING THE COMPOSITE FIBRE PROFILES IS HIGHLY RECOMMENDED.

REV	SUMMARY OF AMENDMENT DETAILS	APP.	DATE

NOTE:
THESE DRAWINGS AND ASSOCIATED DESIGNS ARE THE PROPERTY OF WESTLAKE PUNNETT & ASSOCIATES P/L AND ARE NOT TO BE USED OR REPRODUCED WITHOUT THE PERMISSION OF WESTLAKE PUNNETT & ASSOCIATES P/L. DO NOT SCALE - NO RESPONSIBILITY WILL BE TAKEN BY WESTLAKE PUNNETT & ASSOCIATES P/L FOR ANY DISCREPANCIES CAUSED BY SCALING THESE DRAWINGS

WESTLAKE PUNNETT
office@westlakepunnett.com.au
PO Box 1573 NOWRA 2541

CIVIL AND STRUCTURAL ENGINEERS
WWW.WESTLAKEPUNNETT.COM.AU
WOLLONGONG (02) 4211 0393
NOWRA (02) 4423 5533
ULLADULLA (02) 4455 4397
RESIDENTIAL - COMMERCIAL - INDUSTRIAL

STRUCTURAL NOTES

PROJECT: NARRAWALLEE VIEWING PLATFORM & CARPARK
AT: SURFERS AVE, NARRAWALLEE
FOR: SHOALHAVEN CITY COUNCIL

Design: D.Freeman
Drawn: P.Ramsbottom

Approved

Drawing No. 22142/S01

Date : 10/10/2022

HEALTH AND SAFETY NOTES

THESE NOTES MUST BE READ AND UNDERSTOOD BY ALL INVOLVED IN THE PROJECT. THIS INCLUDES (BUT IS NOT EXCLUDED TO): OWNER, BUILDER, SUB-CONTRACTORS, CONSULTANTS, RENOVATORS, OPERATORS, MAINTENORS, DEMOLISHERS.

1. FALLS, SLIPS, TRIPS

A) WORKING AT HEIGHTS DURING CONSTRUCTION

WHEREVER POSSIBLE, COMPONENTS FOR THIS BUILDING SHOULD BE PREFABRICATED OFF-SITE OR AT GROUND LEVEL TO MINIMISE THE RISK OF WORKERS FALLING MORE THAN TWO METRES. HOWEVER, CONSTRUCTION OF THIS BUILDING MAY REQUIRE WORKERS TO BE WORKING AT HEIGHTS WHERE A FALL IN EXCESS OF TWO METRES IS POSSIBLE AND INJURY IS LIKELY TO RESULT FROM SUCH A FALL. THE BUILDER SHOULD PROVIDE A SUITABLE BARRIER WHEREVER A PERSON IS REQUIRED TO WORK IN A SITUATION WHERE FALLING MORE THAN TWO METRES IS A POSSIBILITY.

DURING OPERATION OR MAINTENANCE

FOR HOUSES OR OTHER LOW-RISE BUILDINGS WHERE SCAFFOLDING IS APPROPRIATE:
CLEANING AND MAINTENANCE OF WINDOWS, WALLS, ROOF OR OTHER COMPONENTS OF THIS BUILDING WILL REQUIRE PERSONS TO BE SITUATED WHERE A FALL FROM A HEIGHT IN EXCESS OF TWO METRES IS POSSIBLE. WHERE THIS TYPE OF ACTIVITY IS REQUIRED, SCAFFOLDING, LADDERS OR TRESTLES SHOULD BE USED IN ACCORDANCE WITH RELEVANT CODES OF PRACTICE, REGULATIONS OR LEGISLATION.
FOR BUILDINGS WHERE SCAFFOLD, LADDERS, TRESTLES ARE NOT APPROPRIATE: CLEANING AND MAINTENANCE OF WINDOWS, WALLS, ROOF OR OTHER COMPONENTS OF THIS BUILDING WILL REQUIRE PERSONS TO BE SITUATED WHERE A FALL FROM A HEIGHT IN EXCESS OF TWO METRES IS POSSIBLE. WHERE THIS TYPE OF ACTIVITY IS REQUIRED, SCAFFOLDING, FALL BARRIERS OR PERSONAL PROTECTIVE EQUIPMENT (PPE) SHOULD BE USED IN ACCORDANCE WITH RELEVANT CODES OF PRACTICE, REGULATIONS OR LEGISLATION.

ANCHORAGE POINTS

ANCHORAGE POINTS FOR PORTABLE SCAFFOLD OR FALL ARREST DEVICES ARE TO BE INSTALLED BY THE BUILDER WHERE REQUIRED. ANY PERSONS ENGAGED TO WORK ON THE BUILDING AFTER COMPLETION OF CONSTRUCTION WORK SHOULD BE INFORMED ABOUT THE ANCHORAGE POINTS.

B) SLIPPERY OR UNEVEN SURFACES

FLOOR FINISHES SPECIFIED

IF FINISHES HAVE BEEN SPECIFIED BY DESIGNER, THESE HAVE BEEN SELECTED TO MINIMISE THE RISK OF FLOORS AND PAVED AREAS BECOMING SLIPPERY WHEN WET OR WHEN WALKED ON WITH WET SHOES/FEET. ANY CHANGES TO THE SPECIFIED FINISH SHOULD BE MADE IN CONSULTATION WITH THE DESIGNER OR, IF THIS IS NOT PRACTICAL, SURFACES WITH AN EQUIVALENT OR BETTER SLIP RESISTANCE SHOULD BE CHOSEN.

FLOOR FINISHES BY OWNER

IF DESIGNER HAS NOT NOT BEEN INVOLVED IN THE SELECTION OF SURFACE FINISHES, THE OWNER IS RESPONSIBLE FOR THE SELECTION OF SURFACE FINISHES IN THE PEDESTRIAN TRAFFICABLE AREAS OF THIS BUILDING. SURFACES SHOULD BE SELECTED IN ACCORDANCE WITH AS HB 197:1999 AND AS 4586:2013.

STEPS, LOOSE OBJECTS AND UNEVEN SURFACES

DUE TO DESIGN RESTRICTIONS FOR THIS BUILDING, STEPS AND/OR RAMPS ARE INCLUDED IN THE BUILDING WHICH MAY BE A HAZARD TO WORKERS CARRYING OBJECTS OR OTHERWISE OCCUPIED. STEPS SHOULD BE CLEARLY MARKED WITH BOTH VISUAL AND TACTILE WARNING DURING CONSTRUCTION, MAINTENANCE, DEMOLITION AND AT ALL TIMES WHEN THE BUILDING OPERATES AS A WORKPLACE.
BUILDING OWNERS AND OCCUPIERS SHOULD MONITOR THE PEDESTRIAN ACCESS WAYS AND IN PARTICULAR ACCESS TO AREAS WHERE MAINTENANCE IS ROUTINELY CARRIED OUT TO ENSURE THAT SURFACES HAVE NOT MOVED OR CRACKED SO THAT THEY BECOME UNEVEN AND PRESENT A TRIP HAZARD. SPILLS, LOOSE MATERIAL, STRAY OBJECTS OR ANY OTHER MATTER THAT MAY CAUSE A SLIP OR TRIP HAZARD SHOULD BE CLEANED OR REMOVED FROM ACCESS WAYS.
CONTRACTORS SHOULD BE REQUIRED TO MAINTAIN A TIDY WORK SITE DURING CONSTRUCTION, MAINTENANCE OR DEMOLITION TO REDUCE THE RISK OF TRIPS AND FALLS IN THE WORKPLACE. MATERIALS FOR CONSTRUCTION OR MAINTENANCE SHOULD BE STORED IN DESIGNATED AREAS AWAY FROM ACCESS WAYS AND WORK AREAS.

2. FALLING OBJECTS

LOOSE MATERIALS OR SMALL OBJECTS

CONSTRUCTION, MAINTENANCE OR DEMOLITION WORK ON OR AROUND THIS BUILDING IS LIKELY TO INVOLVE PERSONS WORKING ABOVE GROUND LEVEL OR ABOVE FLOOR LEVELS. WHERE THIS OCCURS ONE OR MORE OF THE FOLLOWING MEASURES SHOULD BE TAKEN TO AVOID OBJECTS FALLING FROM THE AREA WHERE THE WORK IS BEING CARRIED OUT ONTO PERSONS BELOW.

1. PREVENT OR RESTRICT ACCESS TO AREAS BELOW WHERE THE WORK IS BEING CARRIED OUT.
2. PROVIDE TOEBOARDS TO SCAFFOLDING OR WORK PLATFORMS.
3. PROVIDE PROTECTIVE STRUCTURE BELOW THE WORK AREA.
4. ENSURE THAT ALL PERSONS BELOW THE WORK AREA HAVE PERSONAL PROTECTIVE EQUIPMENT (PPE).

BUILDING COMPONENTS

DURING CONSTRUCTION, RENOVATION OR DEMOLITION OF THIS BUILDING, PARTS OF THE STRUCTURE INCLUDING FABRICATED STEELWORK, HEAVY PANELS AND MANY OTHER COMPONENTS WILL REMAIN STANDING PRIOR TO OR AFTER SUPPORTING PARTS ARE IN PLACE. CONTRACTORS SHOULD ENSURE THAT TEMPORARY BRACING OR OTHER REQUIRED SUPPORT IS IN PLACE AT ALL TIMES WHEN COLLAPSE WHICH MAY INJURE PERSONS IN THE AREA IS A POSSIBILITY.

MECHANICAL LIFTING OF MATERIALS AND COMPONENTS DURING CONSTRUCTION, MAINTENANCE OR DEMOLITION PRESENTS A RISK OF FALLING OBJECTS.
CONTRACTORS SHOULD ENSURE THAT APPROPRIATE LIFTING DEVICES ARE USED, THAT LOADS ARE PROPERLY SECURED AND THAT ACCESS TO AREAS BELOW THE LOAD IS PREVENTED OR RESTRICTED.

3. TRAFFIC MANAGEMENT

FOR BUILDING ON A MAJOR ROAD, NARROW ROAD OR STEEPLY SLOPING ROAD:
PARKING OF VEHICLES OR LOADING/UNLOADING OF VEHICLES ON THIS ROADWAY MAY CAUSE A TRAFFIC HAZARD. DURING CONSTRUCTION, MAINTENANCE OR DEMOLITION OF THIS BUILDING DESIGNATED PARKING FOR WORKERS AND LOADING AREAS SHOULD BE PROVIDED. TRAINED TRAFFIC MANAGEMENT PERSONNEL SHOULD BE RESPONSIBLE FOR THE SUPERVISION OF THESE AREAS. FOR BUILDING WHERE ON-SITE LOADING/UNLOADING IS RESTRICTED:
CONSTRUCTION OF THIS BUILDING WILL REQUIRE LOADING AND UNLOADING OF MATERIALS ON THE ROADWAY. DELIVERIES SHOULD BE WELL PLANNED TO AVOID CONGESTION OF LOADING AREAS AND TRAINED TRAFFIC MANAGEMENT PERSONNEL SHOULD BE USED TO SUPERVISE LOADING/UNLOADING AREAS.
FOR ALL BUILDINGS:
BUSY CONSTRUCTION AND DEMOLITION SITES PRESENT A RISK OF COLLISION WHERE DELIVERIES AND OTHER TRAFFIC ARE MOVING WITHIN THE SITE. A TRAFFIC MANAGEMENT PLAN SUPERVISED BY TRAINED TRAFFIC MANAGEMENT PERSONNEL SHOULD BE ADOPTED FOR THE WORK SITE.

4. SERVICES

GENERAL

RUPTURE OF SERVICES DURING EXCAVATION OR OTHER ACTIVITY CREATES A VARIETY OF RISKS INCLUDING RELEASE OF HAZARDOUS MATERIAL. EXISTING SERVICES ARE LOCATED ON OR AROUND THIS SITE. WHERE KNOWN, THESE ARE IDENTIFIED ON THE PLANS BUT THE EXACT LOCATION AND EXTENT OF SERVICES MAY VARY FROM THAT INDICATED. SERVICES SHOULD BE LOCATED USING AN APPROPRIATE SERVICE (SUCH AS DIAL BEFORE YOU DIG), APPROPRIATE EXCAVATION PRACTICE SHOULD BE USED AND, WHERE NECESSARY, SPECIALIST CONTRACTORS SHOULD BE USED.
LOCATIONS WITH UNDERGROUND POWER:
UNDERGROUND POWER LINES MAY BE LOCATED IN OR AROUND THIS SITE. ALL UNDERGROUND POWER LINES MUST BE DISCONNECTED OR CAREFULLY LOCATED AND ADEQUATE WARNING SIGNS USED PRIOR TO ANY CONSTRUCTION, MAINTENANCE OR DEMOLITION COMMENCING.
LOCATIONS WITH OVERHEAD POWER LINES:
OVERHEAD POWER LINES MAY BE NEAR OR ON THIS SITE. THESE POSE A RISK OF ELECTROCUTION IF STRUCK OR APPROACHED BY LIFTING DEVICES OR OTHER PLANT AND PERSONS WORKING ABOVE GROUND LEVEL. WHERE THERE IS A DANGER OF THIS OCCURRING, POWER LINES SHOULD BE, WHERE PRACTICAL, DISCONNECTED OR RELOCATED. WHERE THIS IS NOT PRACTICAL ADEQUATE WARNING IN THE FORM OF BRIGHT COLOURED TAPE OR SIGNAGE SHOULD BE USED OR A PROTECTIVE BARRIER PROVIDED.

5. MANUAL TASKS

COMPONENTS WITHIN THIS DESIGN WITH A MASS IN EXCESS OF 25kg SHOULD BE LIFTED BY TWO OR MORE WORKERS OR BY MECHANICAL LIFTING DEVICE. WHERE THIS IS NOT PRACTICAL, SUPPLIERS OR FABRICATORS SHOULD BE REQUIRED TO LIMIT THE COMPONENT MASS.
ALL MATERIAL PACKAGING, BUILDING AND MAINTENANCE COMPONENTS SHOULD CLEARLY SHOW THE TOTAL MASS OF PACKAGES AND WHERE PRACTICAL ALL ITEMS SHOULD BE STORED ON SITE IN A WAY WHICH MINIMISES BENDING BEFORE LIFTING. ADVICE SHOULD BE PROVIDED ON SAFE LIFTING METHODS IN ALL AREAS WHERE LIFTING MAY OCCUR. CONSTRUCTION, MAINTENANCE AND DEMOLITION OF THIS BUILDING WILL REQUIRE THE USE OF PORTABLE TOOLS AND EQUIPMENT. THESE SHOULD BE FULLY MAINTAINED IN ACCORDANCE WITH MANUFACTURER'S SPECIFICATIONS AND NOT USED WHERE FAULTY OR (IN THE CASE OF ELECTRICAL EQUIPMENT) NOT CARRYING A CURRENT ELECTRICAL SAFETY TAG. ALL SAFETY GUARDS OR DEVICES SHOULD BE REGULARLY CHECKED AND PERSONAL PROTECTIVE EQUIPMENT SHOULD BE USED IN ACCORDANCE WITH MANUFACTURER'S SPECIFICATION.

6. HAZARDOUS SUBSTANCES

ASBESTOS

FOR ALTERATIONS TO A BUILDING CONSTRUCTED PRIOR TO 1990:
IF THIS EXISTING BUILDING WAS CONSTRUCTED PRIOR TO:
1990 - IT THEREFORE MAY CONTAIN ASBESTOS
1986 - IT THEREFORE IS LIKELY TO CONTAIN ASBESTOS EITHER IN CLADDING MATERIAL OR IN FIRE RETARDANT INSULATION MATERIAL. IN EITHER CASE, THE BUILDER SHOULD CHECK AND, IF NECESSARY, TAKE APPROPRIATE ACTION BEFORE DEMOLISHING, CUTTING, SANDING, DRILLING OR OTHERWISE DISTURBING THE EXISTING STRUCTURE.

POWDERED MATERIALS

MANY MATERIALS USED IN THE CONSTRUCTION OF THIS BUILDING CAN CAUSE HARM IF INHALED IN POWDERED FORM. PERSONS WORKING ON OR IN THE BUILDING DURING CONSTRUCTION, OPERATIONAL MAINTENANCE OR DEMOLITION SHOULD ENSURE GOOD VENTILATION AND WEAR PERSONAL PROTECTIVE EQUIPMENT INCLUDING PROTECTION AGAINST INHALATION WHILE USING POWDERED MATERIAL OR WHEN SANDING, DRILLING, CUTTING OR OTHERWISE DISTURBING OR CREATING POWDERED MATERIAL.

TREATED TIMBER

THE DESIGN OF THIS BUILDING MAY INCLUDE PROVISION FOR THE INCLUSION OF TREATED TIMBER WITHIN THE STRUCTURE. DUST OR FUMES FROM THIS MATERIAL CAN BE HARMFUL. PERSONS WORKING ON OR IN THE BUILDING DURING CONSTRUCTION, OPERATIONAL MAINTENANCE OR DEMOLITION SHOULD ENSURE GOOD VENTILATION AND WEAR PERSONAL PROTECTIVE EQUIPMENT INCLUDING PROTECTION AGAINST INHALATION OF HARMFUL MATERIAL WHEN SANDING, DRILLING, CUTTING OR USING TREATED TIMBER IN ANY WAY THAT MAY CAUSE HARMFUL MATERIAL TO BE RELEASED. DO NOT BURN TREATED TIMBER.

VOLATILE ORGANIC COMPOUNDS

MANY TYPES OF GLUE, SOLVENTS, SPRAY PACKS, PAINTS, VARNISHES AND SOME CLEANING MATERIALS AND DISINFECTANTS HAVE DANGEROUS EMISSIONS. AREAS WHERE THESE ARE USED SHOULD BE KEPT WELL VENTILATED WHILE THE MATERIAL IS BEING USED AND FOR A PERIOD AFTER INSTALLATION. PERSONAL PROTECTIVE EQUIPMENT MAY ALSO BE REQUIRED. THE MANUFACTURER'S RECOMMENDATIONS FOR USE MUST BE CAREFULLY CONSIDERED AT ALL TIMES.

SYNTHETIC MINERAL FIBRE

FIBREGLASS, ROCKWOOL, CERAMIC AND OTHER MATERIAL USED FOR THERMAL OR SOUND INSULATION MAY CONTAIN SYNTHETIC MINERAL FIBRE WHICH MAY BE HARMFUL IF INHALED OR IF IT COMES IN CONTACT WITH THE SKIN, EYES OR OTHER SENSITIVE PARTS OR THE BODY. PERSONAL PROTECTIVE EQUIPMENT INCLUDING PROTECTION AGAINST INHALATION OF HARMFUL MATERIAL SHOULD BE USED WHEN INSTALLING, REMOVING OR WORKING NEAR BULK INSULATION MATERIAL.

7. CONFINED SPACES

EXCAVATION

CONSTRUCTION OF THIS BUILDING AND SOME MAINTENANCE ON THE BUILDING WILL REQUIRE EXCAVATION AND INSTALLATION OF ITEMS WITHIN EXCAVATIONS. WHERE PRACTICAL, INSTALLATION SHOULD BE CARRIED OUT USING METHODS WHICH DO NOT REQUIRE WORKERS TO ENTER THE EXCAVATION. WHERE THIS IS NOT PRACTICAL, ADEQUATE SUPPORT FOR THE EXCAVATED AREA SHOULD BE PROVIDED TO PREVENT COLLAPSE. WARNING SIGNS AND BARRIERS TO PREVENT ACCIDENTAL OR UNAUTHORISED ACCESS TO ALL EXCAVATIONS SHOULD BE PROVIDED.

ENCLOSED SPACES

FOR BUILDINGS WITH ENCLOSED SPACES WHERE MAINTENANCE OR OTHER ACCESS MAY BE REQUIRED:
ENCLOSED SPACES WITHIN THIS BUILDING MAY PRESENT A RISK TO PERSONS ENTERING FOR CONSTRUCTION, MAINTENANCE OR ANY OTHER PURPOSE. THE DESIGN DOCUMENTATION CALLS FOR WARNING SIGNS AND BARRIERS TO UNAUTHORISED ACCESS. THESE SHOULD BE MAINTAINED THROUGHOUT THE LIFE OF THE BUILDING. WHERE WORKERS ARE REQUIRED TO ENTER ENCLOSED SPACES, AIR TESTING EQUIPMENT AND PERSONAL PROTECTIVE EQUIPMENT SHOULD BE PROVIDED.

SMALL SPACES

FOR BUILDINGS WITH SMALL SPACES WHERE MAINTENANCE OR OTHER ACCESS MAY BE REQUIRED:
SOME SMALL SPACES WITHIN THIS BUILDING WILL REQUIRE ACCESS BY CONSTRUCTION OR MAINTENANCE WORKERS. THE DESIGN DOCUMENTATION CALLS FOR WARNING SIGNS AND BARRIERS TO UNAUTHORISED ACCESS. THESE SHOULD BE MAINTAINED THROUGHOUT THE LIFE OF THE BUILDING. WHERE WORKERS ARE REQUIRED TO ENTER SMALL SPACES THEY SHOULD BE SCHEDULED SO THAT ACCESS IS FOR SHORT PERIODS. MANUAL LIFTING AND OTHER MANUAL ACTIVITY SHOULD BE RESTRICTED IN SMALL SPACES.

8. PUBLIC ACCESS

PUBLIC ACCESS TO CONSTRUCTION AND DEMOLITION SITES AND TO AREAS UNDER MAINTENANCE CAUSES RISK TO WORKERS AND PUBLIC. WARNING SIGNS AND SECURE BARRIERS TO UNAUTHORISED ACCESS SHOULD BE PROVIDED. WHERE ELECTRICAL INSTALLATIONS, EXCAVATIONS, PLANT OR LOOSE MATERIALS ARE PRESENT THEY SHOULD BE SECURED WHEN NOT FULLY SUPERVISED.

9. OPERATIONAL USE OF BUILDING

RESIDENTIAL BUILDINGS

THIS BUILDING HAS BEEN DESIGNED FOR USE AS A RESIDENTIAL BUILDING. IF IT, AT A LATER DATE, IT IS USED OR INTENDED TO BE USED AS A WORKPLACE, THE PROVISIONS OF THE WORK HEALTH AND SAFETY ACT 2011 OR SUBSEQUENT REPLACEMENT ACT SHOULD BE APPLIED TO THE NEW USE.

10. OTHER HIGH RISK ACTIVITY

ALL ELECTRICAL WORK SHOULD BE CARRIED OUT IN ACCORDANCE WITH OF PRACTICE: MANAGING ELECTRICAL RISKS AT THE WORKPLACE, AS/NZ 3012 AND ALL LICENSING REQUIREMENTS.
ALL WORK USING PLANT SHOULD BE CARRIED OUT IN ACCORDANCE WITH CODE OF PRACTICE: MANAGING RISKS OF PLANT AT THE WORKPLACE. ALL WORK SHOULD BE CARRIED OUT IN ACCORDANCE WITH CODE OF PRACTICE: MANAGING NOISE AND PREVENTING HEARING LOSS AT WORK.
DUE TO THE HISTORY OF SERIOUS INCIDENTS IT IS RECOMMENDED THAT PARTICULAR CARE BE EXERCISED WHEN UNDERTAKING WORK INVOLVING STEEL CODE CONSTRUCTION AND CONCRETE PLACEMENT. ALL THE ABOVE APPLIES.

REV	SUMMARY OF AMENDMENT DETAILS	APP.	DATE

NOTE:
THESE DRAWINGS AND ASSOCIATED DESIGNS ARE THE PROPERTY OF WESTLAKE PUNNETT & ASSOCIATES P/L AND ARE NOT TO BE USED OR REPRODUCED WITHOUT THE PERMISSION OF WESTLAKE PUNNETT & ASSOCIATES P/L. DO NOT SCALE - NO RESPONSIBILITY WILL BE TAKEN BY WESTLAKE PUNNETT & ASSOCIATES P/L FOR ANY DISCREPANCIES CAUSED BY SCALING THESE DRAWINGS

WESTLAKE PUNNETT
office@westlakepunnett.com.au
PO Box 1573 NOWRA 2541

CIVIL AND STRUCTURAL ENGINEERS
WWW.WESTLAKEPUNNETT.COM.AU
WOLLONGONG (02) 4211 0393
NOWRA (02) 4423 5533
ULLADULLA (02) 4455 4397
RESIDENTIAL - COMMERCIAL - INDUSTRIAL

HEALTH & SAFETY NOTES

Design: D.Freeman
Drawn: P.Ramsbottom

Approved

Drawing No. 22142/S02

PROJECT: NARRAWALLEE VIEWING PLATFORM & CARPARK
AT: SURFERS AVE, NARRAWALLEE
FOR: SHOALHAVEN CITY COUNCIL

Date : 10/10/2022

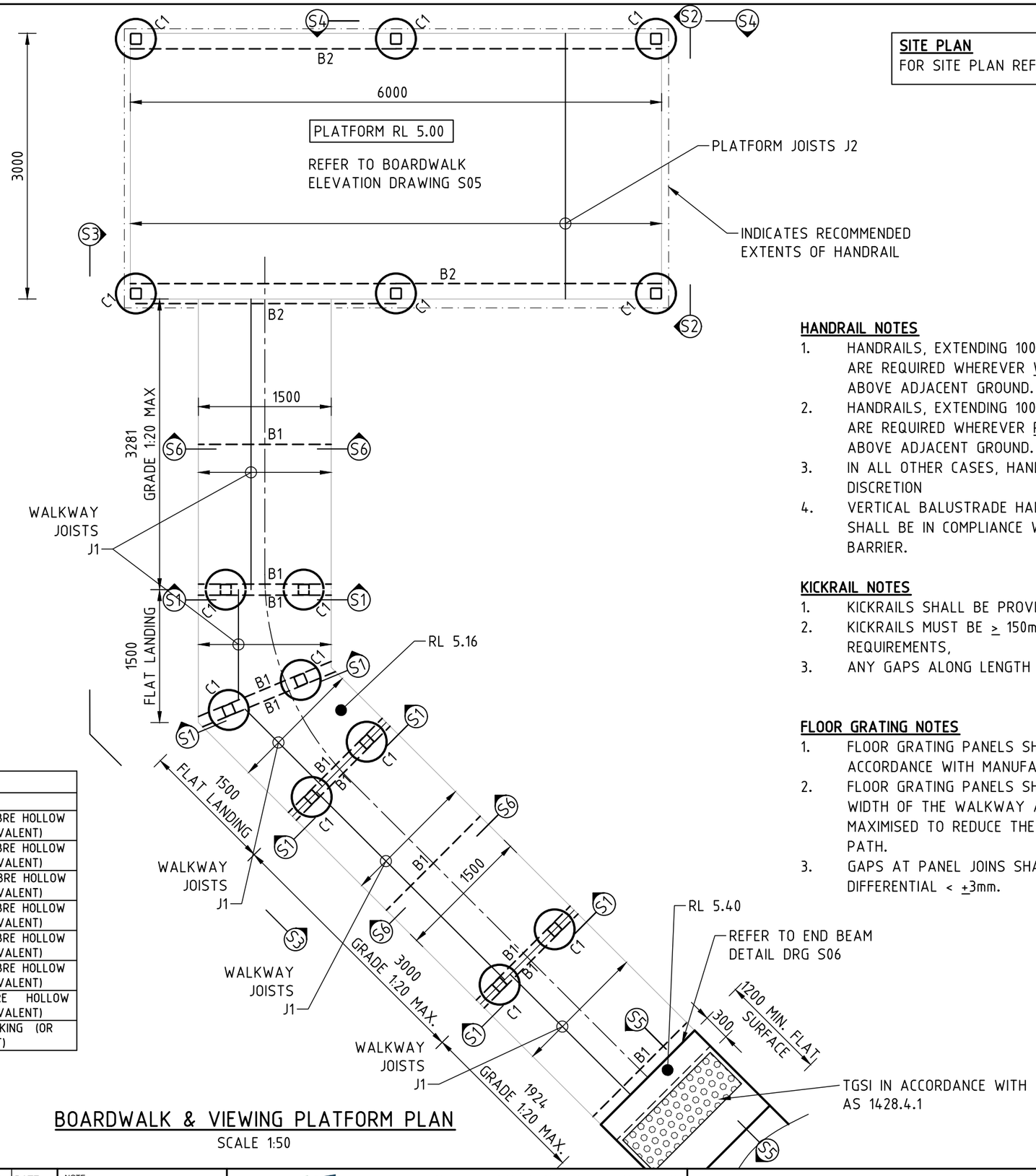

SITE PLAN
FOR SITE PLAN REFER TO CIVIL DRAWING PACKAGE

HANDRAIL NOTES

1. HANDRAILS, EXTENDING 1000mm MIN. ABOVE DECK LEVEL, ARE REQUIRED WHEREVER WALKWAY HEIGHT IS > 1000mm ABOVE ADJACENT GROUND.
2. HANDRAILS, EXTENDING 1000mm MIN. ABOVE DECK LEVEL, ARE REQUIRED WHEREVER PLATFORM HEIGHT IS > 400mm ABOVE ADJACENT GROUND.
3. IN ALL OTHER CASES, HANDRAIL LOCATIONS TO BUILDER'S DISCRETION
4. VERTICAL BALUSTRADE HANDRAIL INFILL (BY SUPPLIER) SHALL BE IN COMPLIANCE WITH AS2156 FOR A 'TYPE A' BARRIER.

KICKRAIL NOTES

1. KICKRAILS SHALL BE PROVIDED AT ALL EDGES U.N.O
2. KICKRAILS MUST BE ≥ 150mm ABOVE DECK LEVEL TO AS1428 REQUIREMENTS,
3. ANY GAPS ALONG LENGTH OF KICKRAIL SHALL BE < 20mm.

FLOOR GRATING NOTES

1. FLOOR GRATING PANELS SHALL BE FIXED TO JOISTS IN ACCORDANCE WITH MANUFACTURER'S INSTRUCTIONS.
2. FLOOR GRATING PANELS SHALL EXTEND FOR THE FULL WIDTH OF THE WALKWAY AND LENGTHS SHALL BE MAXIMISED TO REDUCE THE NUMBER OF JOINS ALONG THE PATH.
3. GAPS AT PANEL JOINS SHALL BE < 8mm AND VERTICAL DIFFERENTIAL < ±3mm.

MEMBER SCHEDULE

TAG	DESCRIPTION	MEMBER
C1	COLUMN	125x125x6 WAGNER COMPOSITE FIBRE HOLLOW SECTION (OR APPROVED EQUIVALENT)
B1	BEAM	125x125x6 WAGNER COMPOSITE FIBRE HOLLOW SECTION (OR APPROVED EQUIVALENT)
B2	BEAM	250x100x8 WAGNER COMPOSITE FIBRE HOLLOW SECTION (OR APPROVED EQUIVALENT)
J1	JOIST @ 450 MAX CTRS	125x125x6 WAGNER COMPOSITE FIBRE HOLLOW SECTION (OR APPROVED EQUIVALENT)
J2	JOIST @ 450 MAX CTRS	125x125x6 WAGNER COMPOSITE FIBRE HOLLOW SECTION (OR APPROVED EQUIVALENT)
H1	HANDRAIL MEMBER	125x125x6 WAGNER COMPOSITE FIBRE HOLLOW SECTION (OR APPROVED EQUIVALENT)
H2	HANDRAIL MEMBER	125x90x6 WAGNER COMPOSITE FIBRE HOLLOW SECTION (OR APPROVED EQUIVALENT)
	DECK	WAGNER MIN-30 MINI-MESH DECKING (OR APPROVED EQUIVALENT)

BOARDWALK & VIEWING PLATFORM PLAN

SCALE 1:50

REV	SUMMARY OF AMENDMENT DETAILS	APP.	DATE

NOTE:
THESE DRAWINGS AND ASSOCIATED DESIGNS ARE THE PROPERTY OF WESTLAKE PUNNETT & ASSOCIATES P/L AND ARE NOT TO BE USED OR REPRODUCED WITHOUT THE PERMISSION OF WESTLAKE PUNNETT & ASSOCIATES P/L. DO NOT SCALE - NO RESPONSIBILITY WILL BE TAKEN BY WESTLAKE PUNNETT & ASSOCIATES P/L FOR ANY DISCREPANCIES CAUSED BY SCALING THESE DRAWINGS

WESTLAKE PUNNETT
office@westlakepunnett.com.au
PO Box 1573 NOWRA 2541

CIVIL AND STRUCTURAL ENGINEERS
WWW.WESTLAKEPUNNETT.COM.AU
WOLLONGONG (02) 4211 0393
NOWRA (02) 4423 5533
ULLADULLA (02) 4455 4397
RESIDENTIAL - COMMERCIAL - INDUSTRIAL

BOARDWALK & VIEWING PLATFORM PLAN

Design: D.Freeman
Drawn: P.Ramsbottom
Approved

Drawing No. 22142/S03

PROJECT: NARRAWALLEE VIEWING PLATFORM & CARPARK
AT: SURFERS AVE, NARRAWALLEE
FOR: SHOALHAVEN CITY COUNCIL

Date : 10/10/2022

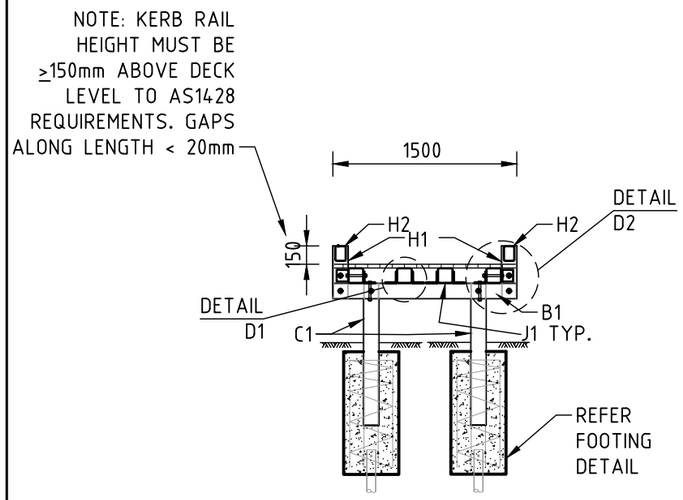

SECTION S1 / S03
SCALE 1:50

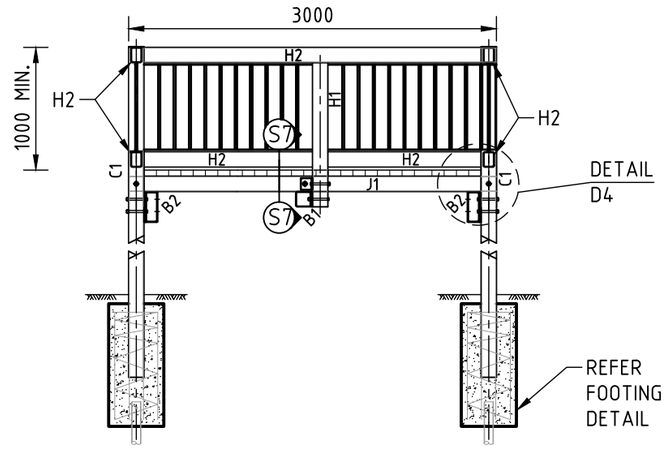

SECTION S2 / S03
SCALE 1:50

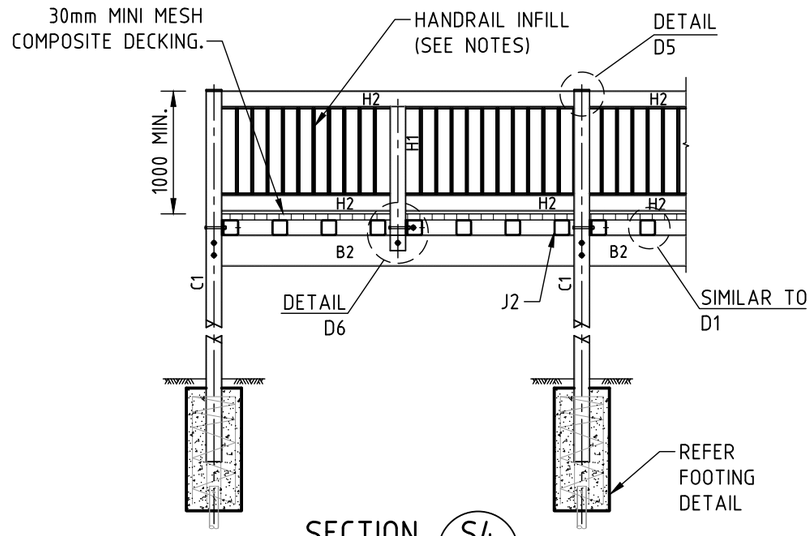

SECTION S4 / S03
SCALE 1:50

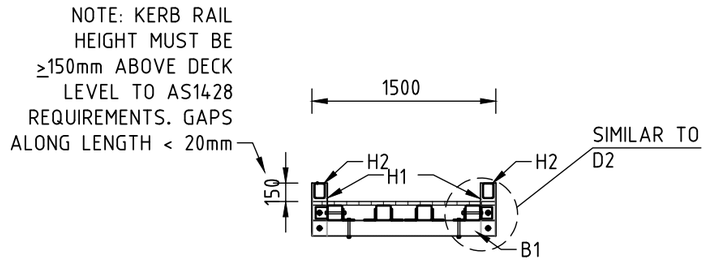

SECTION S6 / S03
SCALE 1:50

INTERMEDIATE KICKRAIL SUPPORTS

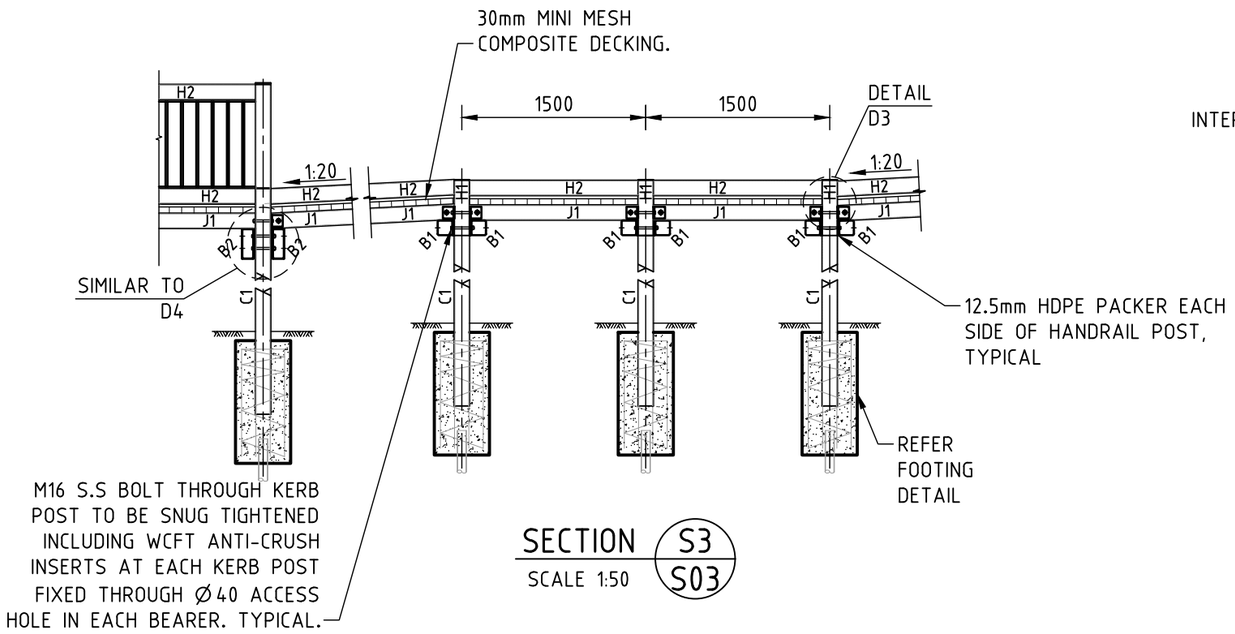

SECTION S3 / S03
SCALE 1:50

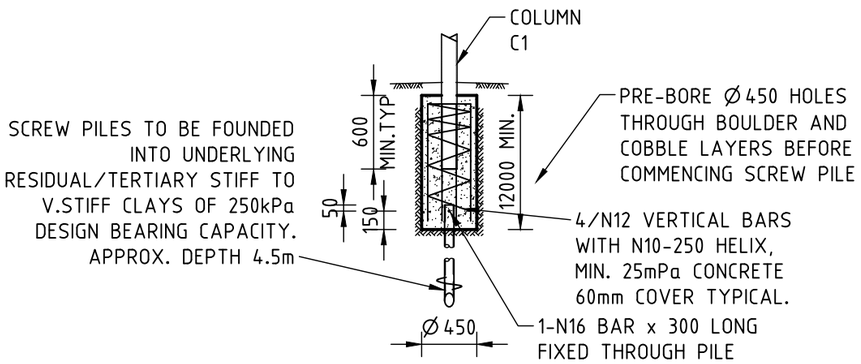

TYPICAL FOOTING DETAIL
SCALE 1:50

REV	SUMMARY OF AMENDMENT DETAILS	APP.	DATE

NOTE:
THESE DRAWINGS AND ASSOCIATED DESIGNS ARE THE PROPERTY OF WESTLAKE PUNNETT & ASSOCIATES P/L AND ARE NOT TO BE USED OR REPRODUCED WITHOUT THE PERMISSION OF WESTLAKE PUNNETT & ASSOCIATES P/L. DO NOT SCALE - NO RESPONSIBILITY WILL BE TAKEN BY WESTLAKE PUNNETT & ASSOCIATES P/L FOR ANY DISCREPANCIES CAUSED BY SCALING THESE DRAWINGS

WESTLAKE PUNNETT
office@westlakepunnett.com.au
PO Box 1573 NOWRA 2541

CIVIL AND STRUCTURAL ENGINEERS
WWW.WESTLAKEPUNNETT.COM.AU
WOLLONGONG (02) 4211 0393
NOWRA (02) 4423 5533
ULLADULLA (02) 4455 4397
RESIDENTIAL - COMMERCIAL - INDUSTRIAL

BOARDWALK ELEVATION & SECTIONS

PROJECT: NARRAWALLEE VIEWING PLATFORM & CARPARK
AT: SURFERS AVE, NARRAWALLEE
FOR: SHOALHAVEN CITY COUNCIL

Design: D.Freeman
Drawn: P.Ramsbottom
Approved

Drawing No. 22142/S04
Date : 10/10/2022

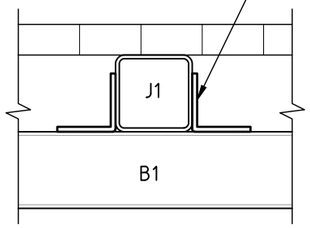

DETAIL D1/S04
SCALE 1:10

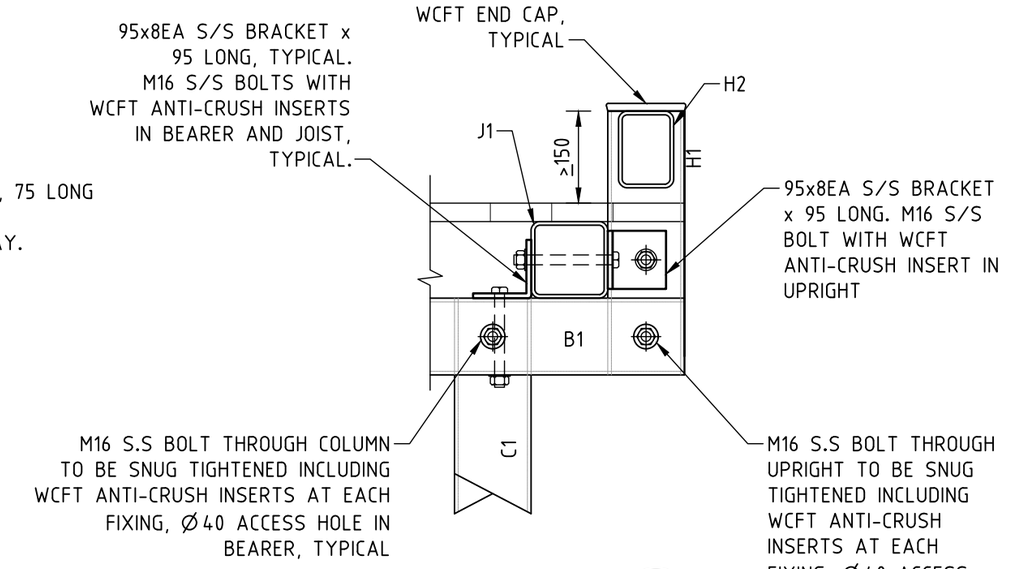

DETAIL D2/S04
SCALE 1:10

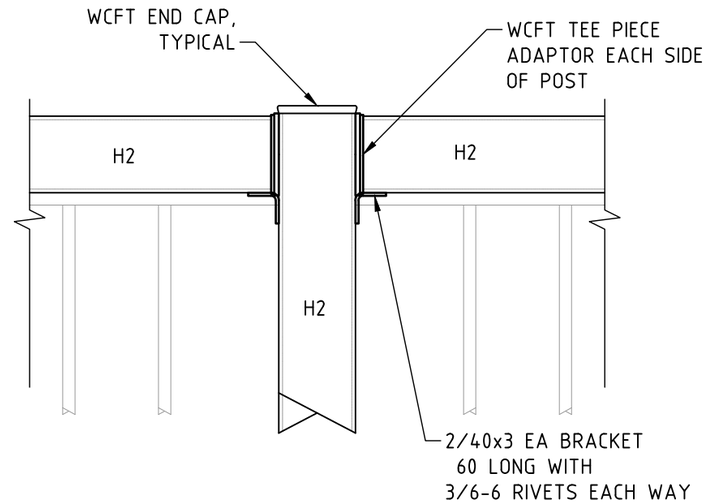

DETAIL D5/S04
SCALE 1:10

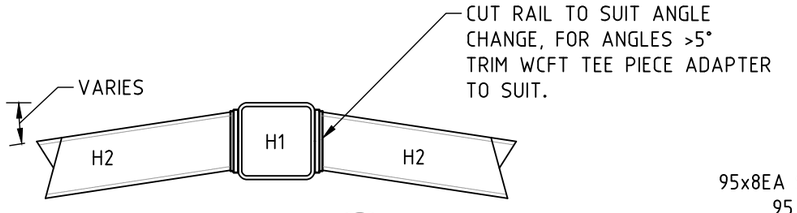

SECTION S8/–
SCALE 1:10

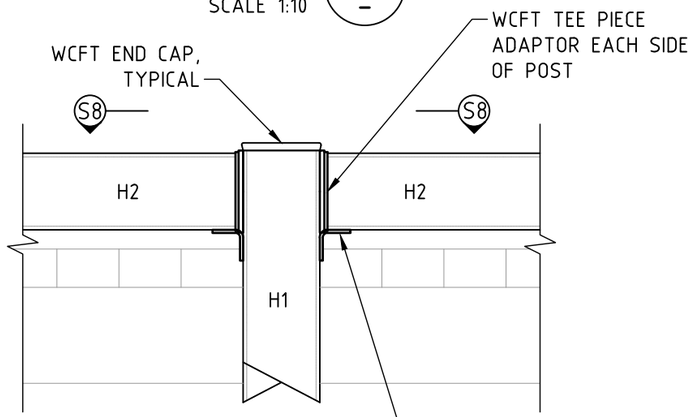

DETAIL D3/S04
SCALE 1:10

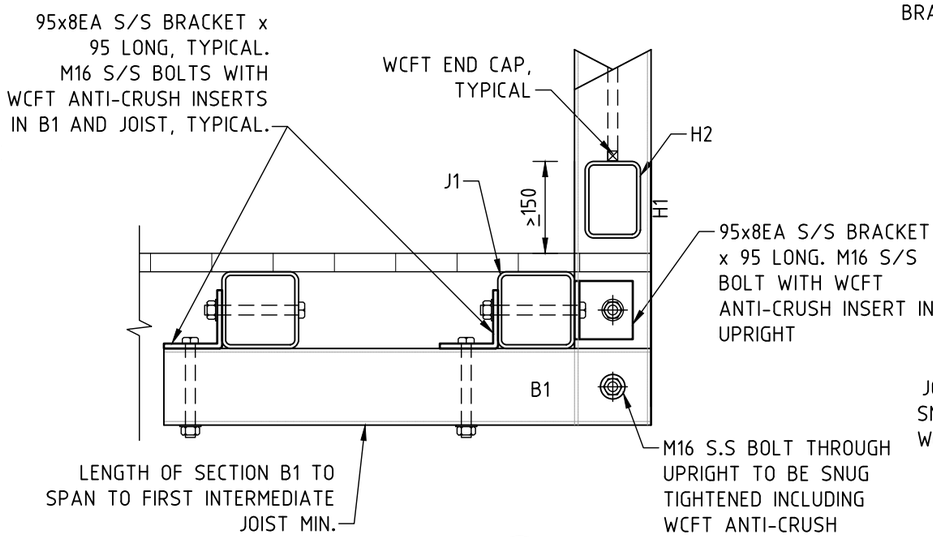

SECTION S7/S04
SCALE 1:10

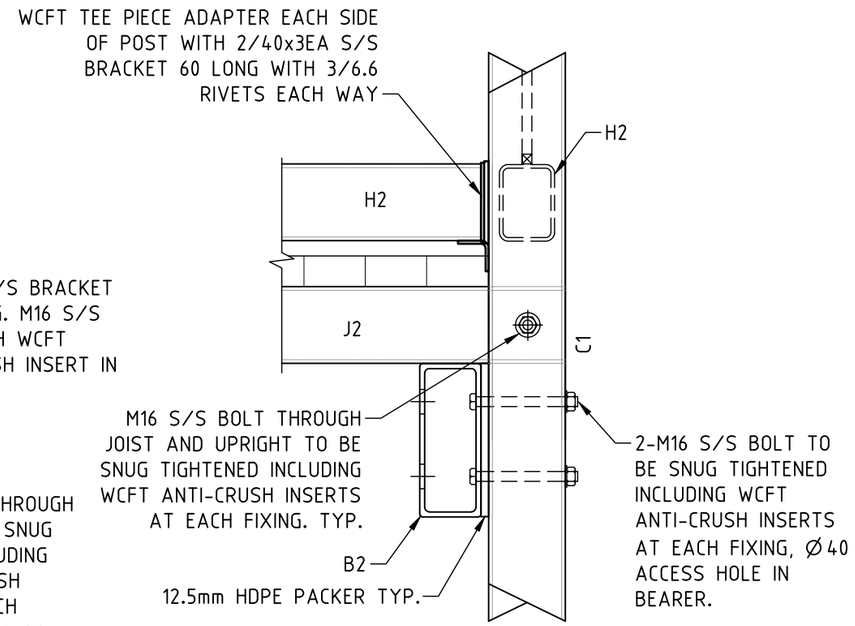

DETAIL D4/S04
SCALE 1:10

REV	SUMMARY OF AMENDMENT DETAILS	APP.	DATE

NOTE:
THESE DRAWINGS AND ASSOCIATED DESIGNS ARE THE PROPERTY OF WESTLAKE PUNNETT & ASSOCIATES P/L AND ARE NOT TO BE USED OR REPRODUCED WITHOUT THE PERMISSION OF WESTLAKE PUNNETT & ASSOCIATES P/L. DO NOT SCALE - NO RESPONSIBILITY WILL BE TAKEN BY WESTLAKE PUNNETT & ASSOCIATES P/L FOR ANY DISCREPANCIES CAUSED BY SCALING THESE DRAWINGS

WESTLAKE PUNNETT
office@westlakepunnett.com.au
PO Box 1573 NOWRA 2541

CIVIL AND STRUCTURAL ENGINEERS
WWW.WESTLAKEPUNNETT.COM.AU
WOLLONGONG (02) 4211 0393
NOWRA (02) 4423 5533
ULLADULLA (02) 4455 4397
RESIDENTIAL - COMMERCIAL - INDUSTRIAL

BOARDWALK DETAILS

PROJECT: NARRAWALLEE VIEWING PLATFORM & CARPARK
AT: SURFERS AVE, NARRAWALLEE
FOR: SHOALHAVEN CITY COUNCIL

Design: D.Freeman
Drawn: P.Ramsbottom

Approved

Drawing No. 22142/S05

Date : 10/10/2022

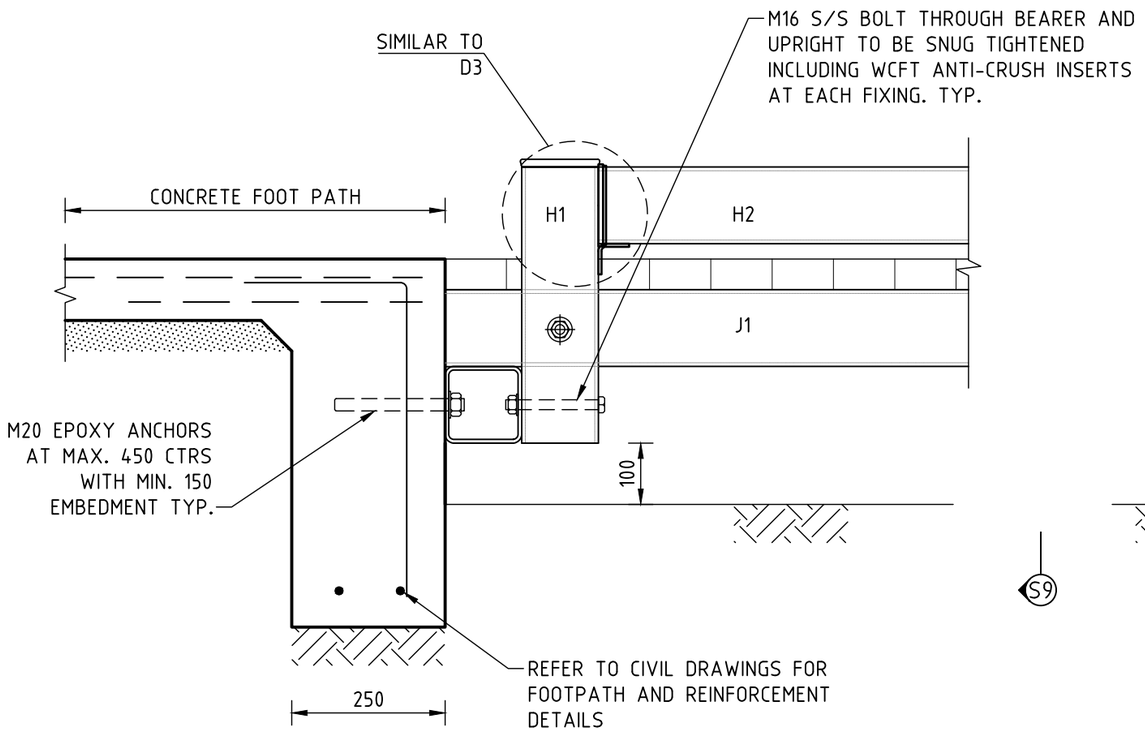

SECTION S5 / S03
SCALE 1:10

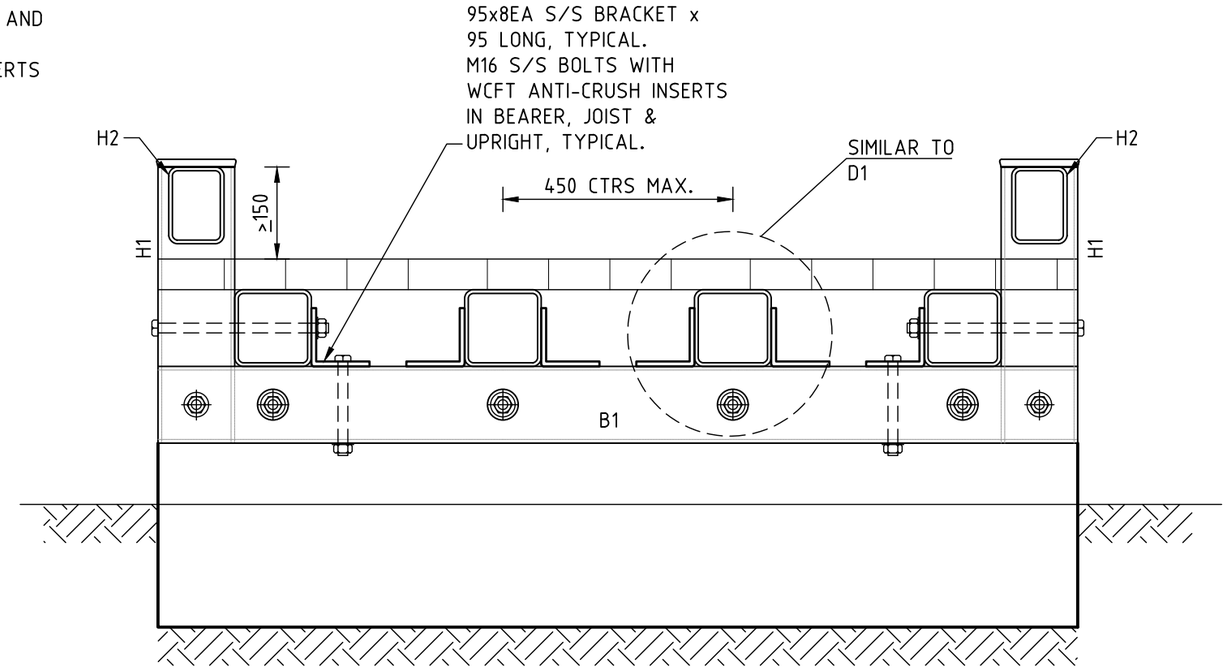

SECTION S9 / –
SCALE 1:10

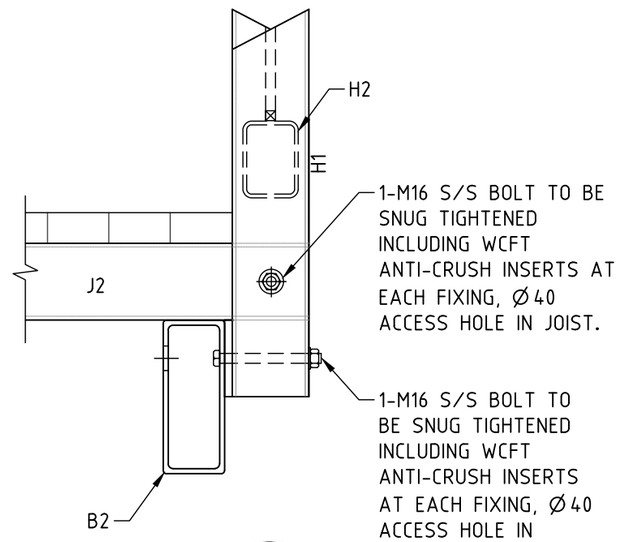

DETAIL D6 / S04
SCALE 1:10

REV	SUMMARY OF AMENDMENT DETAILS	APP.	DATE

NOTE:
THESE DRAWINGS AND ASSOCIATED DESIGNS ARE THE PROPERTY OF WESTLAKE PUNNETT & ASSOCIATES P/L AND ARE NOT TO BE USED OR REPRODUCED WITHOUT THE PERMISSION OF WESTLAKE PUNNETT & ASSOCIATES P/L. DO NOT SCALE - NO RESPONSIBILITY WILL BE TAKEN BY WESTLAKE PUNNETT & ASSOCIATES P/L FOR ANY DISCREPANCIES CAUSED BY SCALING THESE DRAWINGS

WESTLAKE PUNNETT
office@westlakepunnett.com.au
PO Box 1573 NOWRA 2541

CIVIL AND STRUCTURAL ENGINEERS
WWW.WESTLAKEPUNNETT.COM.AU
WOLLONGONG (02) 4211 0393
NOWRA (02) 4423 5533
ULLADULLA (02) 4455 4397
RESIDENTIAL - COMMERCIAL - INDUSTRIAL

END BEAM DETAILS

PROJECT: NARRAWALLEE VIEWING PLATFORM & CARPARK
AT: SURFERS AVE, NARRAWALLEE
FOR: SHOALHAVEN CITY COUNCIL

Design: D.Freeman
Drawn: P.Ramsbottom
Approved

Drawing No. 22142/S06
Date : 10/10/2022

APPENDIX B – Threatened Species Likelihood of Occurrence

NSW Threatened Species Likelihood of Occurrence Table

The table of likelihood of occurrence evaluates the likelihood of threatened species to occur on the subject site. This list is derived from previously recorded species within a 5 km radius (taken from NSW BioNet Atlas) around the subject site searched on the 25 November 2022. Ecology information unless otherwise stated, has been obtained from the *Threatened Biodiversity Profile Search* on the NSW OEH (Office of Environment & Heritage) online database (https://www.environment.nsw.gov.au/threatenedspeciesapp/).

Atlas Map

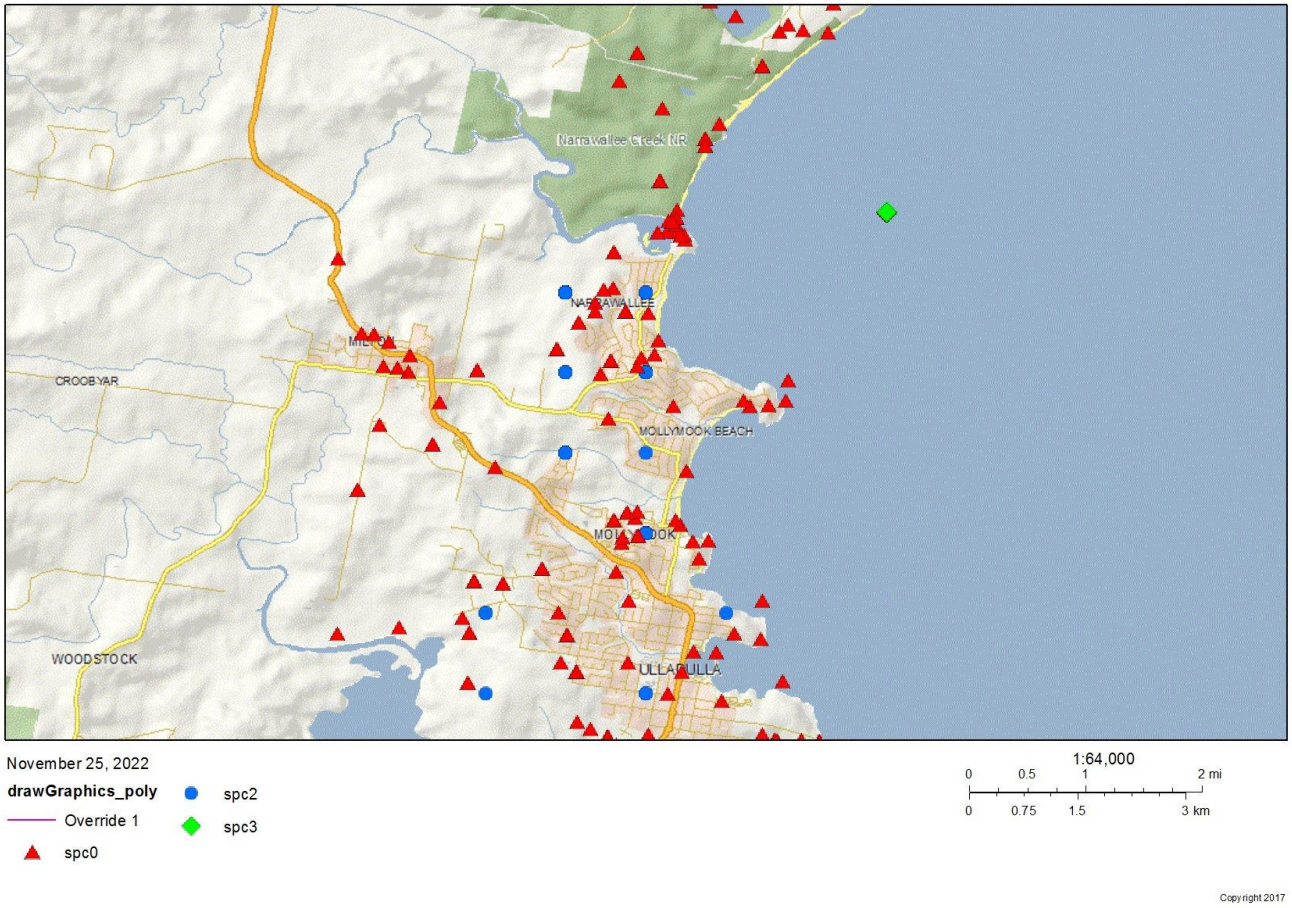

Likelihood of occurrence in study area

1. Unlikely – Species, population or ecological community is not likely to occur. Lack of previous recent (<25 years) records and suitable potential habitat limited or not available in the study area.
2. Likely – Species, population or ecological community could occur and study area is likely to provide suitable habitat. Previous records in the locality and/or suitable potential habitat in the study area.
3. Present – Species, population or ecological community was recorded during the field investigations.

Possibility of impact

1. Unlikely – The proposed activity would be unlikely to impact this species or its habitats. No NSW *Biodiversity Conservation Act 2016* "Test of Significance" or EPBC Act significance assessment is necessary for this species.
2. Likely – The proposed activity could impact this species, population or ecological community or its habitats. A NSW *Biodiversity Conservation Act 2016* "Test of Significance" and/or EPBC Act significance assessment is required for this species, population or ecological community.

Note that where further assessment is deemed required, this is undertaken within the REF as a Test of Significance (in the case of NSW listed species) or an EPBC Significant Impact Assessment (in the case of Commonwealth listed species).

Endangered Ecological Community name	***Status***	***Likelihood of presence within areas impacted by the activity***
Bangalay Sand Forest of the Sydney Basin and South East Corner Bioregions	Endangered - *NSW* BC *Act*	Does not occur on-site (refer to Section 2.1 of this REF).
Coastal Saltmarsh in the NSW North Coast, Sydney Basin and South East Corner Bioregions	Endangered - *NSW* BC *Act* Vulnerable - Commonwealth *EPBC Act*	Does not occur on-site.
Freshwater wetlands on coastal floodplains of the NSW North Coast, Sydney Basin and South East Corner bioregions	Endangered - *NSW* BC *Act*	Does not occur on-site.
Illawarra Lowlands Grassy Woodland in the Sydney Basin Bioregion	Endangered - NSW BC Act	Does not occur on-site.

	Critically Endangered - Commonwealth EPBC Act	
Illawarra Subtropical Rainforest in the Sydney Basin Bioregion	Endangered - *NSW* BC *Act* Critically Endangered - Commonwealth *EPBC Act*	Does not occur on-site.
Littoral Rainforest in the New South Wales North Coast, Sydney Basin and South East Corner Bioregions	Endangered - NSW BC Act Critically Endangered - Commonwealth EPBC Act	Does not occur on-site.
Swamp oak floodplain forest of the NSW North Coast, Sydney Basin and South East Corner bioregions	Endangered - *NSW* BC *Act* Endangered - Commonwealth *EPBC Act*	Does not occur on-site.
Swamp sclerophyll forest on coastal floodplains of the NSW North Coast, Sydney Basin and South East Corner bioregions	Endangered - NSW BC Act	Does not occur on-site.

Species name	***Status***	***Habitat requirements (www.environment.nsw.gov.au)***	***Likelihood of presence within areas impacted by the activity***
FLORA			
Scrub Turpentine *Rhodamnia rubescens*	Endangered NSW BC Act and Critically Endangered EPBC Act	Species is found in littoral, warm temperate and subtropical and wet sclerophyll forest usually on volcanic and sedimentary soils.	Unlikely to occur. No suitable habitat present within the site. Not observed at the site during site investigations.

Magenta Lilly Pilly *Syzygium paniculatum*	Endangered NSW BC Act and Vulnerable EPBC Act	On the south coast, the tree occurs on grey soils over sandstone, restricted mainly to remnants stands of littoral coastal rainforest.	Unlikely to occur. No suitable habitat present within the site. Not observed at the site during site investigations.
Thick Lip Spider Orchid *Caladenia tessellate*	Endangered NSW BC Act and Vulnerable EPBC Act	Unclear although generally found in grassy sclerophyll woodland on clay loams or sandy soils.	Unlikely due to the high level of disturbance and vegetation clearing at the site.
Leafless Tongue Orchid *Cryptostylis hunteriana*	Vulnerable NSW BC Act and EPBC Act	The larger populations typically occur in woodland dominated by Scribbly Gum *Eucalyptus sclerophylla*, Silvertop Ash (*E. sieberi*), Red Bloodwood *Corymbia gummifera* and Black Sheoak *Allocasuarina littoralis*; appears to prefer open areas in the understorey of this community and is often found in association with the Large Tongue Orchid *C. subulata* and the Tartan Tongue Orchid *C. erecta*.	Unlikely to occur. No suitable habitat present within the site.
AMPHIBIANS			
Stuttering Frog *Mixophyes balbus*	Vulnerable *EPBC Act* Endangered *NSW BC Act*	Found in rainforest and wet, tall open forest in the foothills and escarpment on the eastern side of the Great Dividing Range.	Unlikely to occur. No suitable habitat present within the site.
Giant Burrowing Frog *Heleioporus australiacus*	Vulnerable *EPBC Act* Vulnerable *NSW BC Act*	Found in heath, woodland and open dry sclerophyll forest on a variety of soil types except those that are clay based. Breeding habitat of this species is generally soaks or pools within first or second order streams. They are also commonly recorded from 'hanging swamp' seepage lines and where small pools form from the collected water.	Unlikely to occur. No suitable habitat present within the site. Area is clay-based. No breeding habitat nearby.

Green and Golden Bell Frog *Litoria aurea*	Vulnerable *EPBC Act* Endangered *NSW* BC *Act*	Marshes, dams and stream-sides, particularly those containing bullrushes (*Typha* spp.) or spikerushes (*Eleocharis* spp.). Optimum habitat for the species includes water-bodies that are unshaded, free of predatory fish such as Plague Minnow (*Gambusia holbrooki*), with a grassy area nearby and diurnal sheltering sites available. Some sites, particularly in the Greater Sydney region occur in highly disturbed areas (OEH 2017).	Unlikely to occur. No suitable habitat present within the site. The adjacent open stormwater drains do not provide sufficient habitat for the species persistence.
REPTILES			
Loggerhead Turtle *Caretta caretta*	Endangered *EPBC Act* Endangered *NSW* BC *Act*	The species is ocean-dwellers, foraging in deeper water for fish, jellyfish and bottom-dwelling animals. The female comes ashore to lay eggs in a hole dug on the beach in tropical regions during the warmer months.	Unlikely to occur. No suitable habitat present within the site.
Green Turtle *Chelodia mydas*	Vulnerable *EPBC Act* and *NSW* BC *Act*	Ocean-dwelling species spending most of its live at sea. Eggs laid in holes dug in beaches throughout their range.	Unlikely to occur. No suitable habitat present within the site.
BIRDS			
Superb Fruit-Dove *Ptilinopus superbus*	Vulnerable *EPBC Act* and *NSW* BC *Act*	Inhabits rainforest and similar closed forest where in forages high in the canopy, eating the fruits of may tree species such as figs and palms.	Unlikely to occur. No suitable habitat within the site.
White-throated Needletail *Hirundapus caudacutus*	Vulnerable and Migratory *EPBC Act*	Almost exclusively aerial, from heights of less than 1 m up to more than 1000 m above the ground. Because they are aerial, it has been stated that conventional habitat descriptions are inapplicable, but there are, nevertheless, certain preferences exhibited by the species. Although they occur over most types of habitat, they are probably recorded most often above wooded areas, including open forest and rainforest, and may also fly between trees or in clearings, below the canopy, but they are less commonly recorded flying above woodland. They also commonly occur over heathland, but less often over treeless areas, such as grassland or swamps. When flying above farmland, they are more often recorded above partly cleared pasture, plantations or remnant vegetation at the edge of	Possibly occurring over or in proximity to the site, but unlikely to utilise or rely on available habitat within the site.

		paddocks. In coastal areas, they are sometimes seen flying over sandy beaches or mudflats, and often around coastal cliffs and other areas with prominent updraughts, such as ridges and sand-dunes. They are sometimes recorded above islands well out to sea.	
Shy Albatross *Thalassarche cauta*	Vulnerable BC Act and EPBC Act	The Shy Albatross is circumpolar in distribution, occurring widely in the southern oceans. Islands off Australia and New Zealand provide breeding habitat. The specie is pelagic (open ocean) inhabiting tropical and subtropical marine waters.	Unlikely to occur within the site. No suitable breeding or foraging habitat present.
Black-browed Albatross *Thalassarche cauta*	Vulnerable NSW BC Act and EPBC Act	The Black-browed Albatross has a circumpolar range over the southern oceans, and are seen off the southern Australia coast mainly during winter. Spends most of its time at sea, breeding on small isolated islands. This species feeds on fish, crustaceans, offal, and squid.	Unlikely to occur within the site. No suitable breeding or foraging habitat present.
White-bellied Sea-Eagle *Haliaeetus leucogaster*	*NSW* BC *Act* Vulnerable	Found in coastal habitats (especially those close to the sea-shore) and around terrestrial wetlands in tropical and temperate regions of mainland Australia and its offshore islands. The habitats occupied by the sea-eagle are characterized by the presence of large areas of open water (larger rivers, swamps, lakes, the sea). Birds have been recorded in (or flying over) a variety of terrestrial habitats. The species is mostly recorded in coastal lowlands, but can occupy habitats up to 1400 m above sea level on the Northern Tablelands of NSW and up to 800 m above sea level in Tasmania and South Australia. Birds have been recorded at or in the vicinity of freshwater swamps, lakes, reservoirs, billabongs, saltmarsh and sewage ponds. They also occur at sites near the sea or sea-shore, such as around bays and inlets, beaches, reefs, lagoons, estuaries and mangroves.	Likely to occur at, over or in proximity to the site. Assessment of potential impact provided in Section 3.2 of this REF.
Square-Tailed Kite *Lophoictinia isura*	Vulnerable *NSW* BC *Act*	Summer breeding migrant to the south-east, including the NSW south coast, arriving in September and leaving by March. Found in a variety of timbered habitats including dry woodlands and open forests. Shows a particular preference for timbered watercourses large hunting ranges of more than 100km2. Breeding is from July to February, with nest sites generally	Possibly occurring over or in proximity to the site, but unlikely to utilise available habitat within the site. No stick nests present in the proposed activity site.

		located along or within 200m of riparian areas, near watercourses, in a fork or on large horizontal limbs.	
Eastern Osprey *Pandion cristatus*	Vulnerable NSW BC *Act*	Favour coastal areas, especially the mouths of large rivers, lagoons and lakes. Feed on fish over clear, open water. Breed from July to September in NSW. Nests are made high up in dead trees or in dead crowns of live trees, usually within one kilometre of the sea.	Possibly occurring over or in proximity to the site, but unlikely to utilise available habitat within the site. No stick nests in proposed works site.
Sooty Oystercatcher *Haematopus fuliginosus*	Vulnerable NSW BC *Act*	Shore bird. Found around the entire Australian coast, including offshore islands, being most common in Bass Strait. Small numbers of the species are evenly distributed along the NSW coast. The availability of suitable nesting sites may limit populations. Favours rocky headlands, rocky shelves, exposed reefs with rock pools, beaches and muddy estuaries. Forages on exposed rock or coral at low tide for foods such as limpets and mussels. Breeds in spring and summer, almost exclusively on offshore islands, and occasionally on isolated promontories. The nest is a shallow scrape on the ground, or small mounds of pebbles, shells or seaweed when nesting among rocks.	Possibly occurring over or in proximity to the site, but unlikely to utilise available habitat within the site. No breeding habitat or favoured foraging habitat.
Pied Oystercatcher *Haematopus longirostris*	Endangered *NSW* BC *Act*	Favours intertidal flats of inlets and bays, open beaches and sandbanks. Forages on exposed sand, mud and rock at low tide, for molluscs, worms, crabs and small fish. Nests mostly on coastal or estuarine beaches although occasionally they use saltmarsh or grassy areas. Nests are shallow scrapes in sand above the high tide mark, often amongst seaweed, shells and small stones.	Possibly occurring over or in proximity to the site, but unlikely to utilise available habitat within the site. No breeding habitat or favoured foraging habitat.
Eastern Hooded Dotteral (Hooded Plover) *Thinornis cucullatus cucullatus*	*NSW* BC *Act:* Critically Endangered *EPBC Act:* Vulnerable	In south-eastern Australia Hooded Plovers prefer sandy ocean beaches, especially those that are broad and flat, with a wide wave-wash zone for feeding, much beachcast seaweed, and backed by sparsely vegetated sand-dunes for shelter and nesting. Occasionally Hooded Plovers are found on tidal bays and estuaries, rock platforms and rocky or sand-covered reefs near sandy beaches, and small beaches in lines of cliffs. They	Possibly occurring over or in proximity to the site, but unlikely to utilise available habitat within the site. No breeding habitat or favoured foraging habitat.

		regularly use near-coastal saline and freshwater lakes and lagoons, often with saltmarsh. Hooded Plovers forage in sand at all levels of the zone of wave wash during low and mid-tide or among seaweed at high-tide, and occasionally in dune blowouts after rain. At night they favour the upper zones of beaches for roosting. When on rocks they forage in crevices in the wave-wash or spray zone, avoiding elevated rocky areas and boulder fields. In coastal lagoons they forage in damp or dry substrates and in shallow water, depending on the season and water levels. In eastern Australia, Hooded Plovers usually breed from August to March on sandy ocean beaches strewn with beachcast seaweed, in a narrow strip between the high-water mark and the base of the fore-dunes. They often nest within 6 m of the fore-dune, mostly within 5 m of the high-water mark, but occasionally among or behind dunes.	
Eastern Curlew *Numenius madagascariensis*	Critically Endangered *EPBC Act*	Most commonly associated with sheltered coasts, especially estuaries, bays, harbours, inlets and coastal lagoons, with large intertidal mudflats or sandflats, often with beds of seagrass. Occasionally, the species occurs on ocean beaches (often near estuaries), and coral reefs, rock platforms, or rocky islets. The birds are often recorded among saltmarsh and on mudflats fringed by mangroves, and sometimes use the mangroves. The birds are also found in saltworks and sewage farms (Marchant & Higgins 1993). The numbers of Eastern Curlew recorded during one study were correlated with wetland areas. Mainly forages on soft sheltered intertidal sandflats or mudflats, open and without vegetation or covered with seagrass, often near mangroves, on saltflats and in saltmarsh, rockpools and among rubble on coral reefs, and on ocean beaches near the tideline. The birds are rarely seen on near-coastal lakes and in grassy areas. Roosts on sandy spits and islets, especially on dry beach sand near the high-water mark, and among coastal vegetation including low saltmarsh or mangroves. It occasionally roosts on	Unlikely to occur within the site. No suitable habitat present.

		reef-flats, in the shallow water of lagoons and other near-coastal wetlands. Eastern Curlews are also recorded roosting in trees and on the upright stakes of oyster-racks.	
Little Tern *Sternula albifrons*	Endangered NSW BC Act Migratory EPBC Act	Mostly exclusively coastal, preferring sheltered environments; however may occur several kilometres from the sea in harbours, inlets and rivers (with occasional offshore islands or coral cay records). Nests in small, scattered colonies in low dunes or on sandy beaches just above the high tide mark near estuary mouths or adjacent to coastal lakes and islands. Nests in a scrape in the sand, which may be lined with shell grit, seaweed or small pebbles.	Unlikely to occur within the site. No suitable habitat present.
Gang-gang Cockatoo *Callocephalon fimbriatum*	Vulnerable NSW BC Act	Tall mountain forests and woodlands, particularly in heavily timbered and mature wet sclerophyll forests. In winter, may occur at lower altitudes in drier more open eucalypt forests and woodlands, and often found in urban areas. Preferring more open eucalypt forests and woodlands, particularly in box-ironbark assemblages, or in dry forest in coastal areas. Favours old growth attributes for nesting and roosting	Unlikely to occur within the site. No suitable habitat present. No breeding or foraging habitat present.
Glossy Black-cockatoo *Calyptorhynchus lathami*	Vulnerable NSW BC Act	The species inhabits open forest and woodlands of the coast where stands of she-oak occur. In the locality the species feed almost exclusively on the seeds of the black she-oak *Allocasuarina littoralis* shredding the cones with their bill.	Unlikely to occur within the site. No suitable habitat present. No breeding or foraging habitat present.
Little Lorikeet *Glossopsitta discolor*	Vulnerable NSW BC Act	The Little Lorikeet is distributed widely across the coastal and Great Divide regions of eastern Australia from Cape York to South Australia. NSW provides a large portion of the species' core habitat. Forages primarily in the canopy of open *Eucalyptus* forest and woodland, yet also finds food in *Angophora, Melaleuca* and other nectar and fruit bearing trees.	Unlikely to occur within the site. No suitable habitat present. No breeding or foraging habitat present.
Swift Parrot *Lathamus discolour*	Endangered EPBC Act Endangered NSW BC Act	Migrates to the Australian south-east mainland between March and October. On the mainland they occur in areas where eucalypts are flowering profusely or where there are abundant lerp (from sap-sucking bugs) infestations. Favoured feed trees include winter flowering species such as Swamp Mahogany	Unlikely to occur within the site. No suitable habitat present. No breeding or foraging habitat present.

		Eucalyptus robusta, Spotted Gum *Corymbia maculata*, Red Bloodwood *C. gummifera*, Mugga Ironbark *E. sideroxylon*, and White Box E. albens. Commonly used lerp infested trees include Inland Grey Box E. microcarpa, Grey Box E. moluccana and Blackbutt E. pilularis. Return to some foraging sites on a cyclic basis depending on food availability. Following winter they return to Tasmania where they breed from September to January, nesting in old trees with hollows and feeding in forests dominated by Tasmanian Blue Gum Eucalyptus globulus.	
Eastern Ground Parrot *Pezoporus wallicus wallicus*	Vulnerable NSW BC Act	The Ground Parrot occurs in high rainfall coastal and near coastal low heathlands and sedgelands, generally below one metre in height and very dense (up to 90% projected foliage cover).	Unlikely to occur within the site. No suitable habitat present.
Powerful Owl *Ninox strenua*	Vulnerable NSW BC Act	Coastal Woodland, Dry Sclerophyll Forest, wet sclerophyll forest and rainforest- Can occur in fragmented landscapes Roosts in dense vegetation comprising species such as Turpentine *Syncarpia glomulifera*, Black She-oak *Allocasuarina littoralis*, Blackwood *Acacia melanoxylon*, Rough-barked Apple *Angophora floribunda,* Cherry Ballart Exocarpus cupressiformis and a number of eucalypt species. requires old growth elements-hollow bearing tree resources for nesting and prey resource. Nests in large tree hollows in large eucalypts that are at least 150yrs old. Often in riparian areas. Large home range	Possibly occurring over or in proximity to the site, but unlikely to utilise available habitat within the site. No breeding habitat (hollow-bearing trees).
Sooty owl *Tyto tenebricosa*	Vulnerable NSW BC Act	Occurs in rainforest, including dry rainforest, subtropical and warm temperate rainforest, as well as moist eucalypt forest.	Unlikely to occur within the site. No suitable habitat present.
Regent Honeyeater *Anthochaera phyrgia*	Endangered NSW BC Act, Critically Endangered EPBC Act.	The species inhabits dry open forest and woodland, particularly Box-Ironbark woodland, and riparian forests of River Sheoak. Regent Honeyeaters inhabit woodlands that support a significantly high abundance and species richness of bird species. These woodlands have significantly large numbers of mature trees, high canopy cover and abundance of mistletoes	Unlikely to occur within the site. No suitable habitat present.

White-fronted Chat *Epthianura albifrons*	Vulnerable NSW BC Act	Along the coastline, it is found predominantly in saltmarsh vegetation but also in open grasslands and sometimes in low shrubs bordering wetland areas. Gregarious species, usually found foraging on bare or grassy ground in wetland areas, singly or in pairs.	Unlikely to occur within the site. No suitable habitat present.
Varied Sittella *Daphoenositta chrysoptera*	Vulnerable NSW BC Act	Inhabits eucalypt forests and woodlands, especially those containing rough-barked species and mature smooth-barked gums with dead branches, mallee and Acacia woodland	Potential to occur at, over, or in proximity to the site. Assessment of potential impact provided in Section 3.2 of this REF.
Scarlet Robin *Petroica boodang*	Vulnerable NSW BC Act	The Scarlet Robin lives in dry eucalypt forests and woodlands. The understorey is usually open and grassy with few scattered shrubs. Scarlet Robin habitat usually contains abundant logs and fallen timber: these are important components of its habitat. This species' nest is an open cup made of plant fibres and cobwebs and is built in the fork of tree usually more than 2 metres above the ground; nests are often found in a dead branch in a live tree, or in a dead tree or shrub.	Unlikely to occur within the site. No suitable habitat present. No nests present.
MAMMALS			
Spotted-tailed Quoll *Dasyurus maculatus*	Vulnerable NSW BC Act and Endangered EPBC Act	The species has been recorded across a range of habitat types, including rainforest, open forest, woodland, coastal heath and inland riparian forest, from the sub-alpine zone to the coastline. Quolls use hollow-bearing trees, fallen logs, other animal burrows, small caves and rock outcrops as den sites.	Unlikely to occur within the site. No suitable habitat present.
Southern Brown Bandicoot (eastern) *Isoodon obesulus obesulus*	Vulnerable NSW BC Act and Endangered EPBC Act	They are generally only found in heath or open forest with a heathy understorey on sandy or friable soils.	Unlikely to occur within the site. No suitable habitat present.
Koala *Phascolarctos cinereus*	Endangered NSW BC Act and EPBC Act	Inhabit eucalypt woodlands and forests. Feed on the foliage of more than 70 eucalypt species and 30 non-eucalypt species, but in any one area will select preferred browse species	Unlikely to occur within the site. No suitable habitat or preferred feed trees present.

Yellow-bellied Glider *Petaurus australis*	Vulnerable NSW BC Act and EPBC Act	Occur in tall mature eucalypt forest generally in areas with high rainfall and nutrient rich soils	Unlikely to occur within the site. No suitable habitat present.
Greater Glider *Petauroides volans*	Endangered EPBC Act	The Greater Glider occurs in eucalypt forests and woodlands along the east coast of Australia from northeast Queensland to the Central Highlands of Victoria. Feeds exclusively on eucalypt leaves, buds, flowers and mistletoe. Shelter during the day in tree hollows and will use up to 18 hollows in their home range.	Unlikely to occur within the site. No suitable habitat present.
Grey-headed Flying-fox *Pteropus poliocephalus*	Vulnerable NSW BC Act and EPBC Act	Occurs in subtropical and temperate rainforests, tall sclerophyll forests and woodlands, heaths and swamps as well as urban gardens and cultivated fruit crops. Roosting camps are generally located within 20 kilometres of a regular food source and are commonly found in gullies, close to water, in vegetation with a dense canopy. The species feeds on the nectar and pollen of native trees, in particular *Eucalyptus, Melaleuca* and *Banksia,* and fruits of rainforest trees and vines	Possibly occurring over or in proximity to the site, but unlikely to utilise available habitat within the site. Nearest roost is approximately ten kilometres away in Yatte Yattah Nature Reserve. The site does not provide a food source for the species.
Eastern Coastal Free-tailed Bat *Micronomus norfolkensis*	Vulnerable NSW BC Act	Occur in dry sclerophyll forest, woodland, swamp forests and mangrove forests east of the Great Dividing Range. Roosts mainly in tree hollows but will also roost under bark on in man-made structures.	Possibly occurring over or in proximity to the site, but unlikely to rely on the site. No roosting habitat or food resources affected.
Eastern False Pipistrelle *Falsistrellus tasmaniensis*	Vulnerable NSW BC Act	Prefers moist habitats, with trees taller than 20m. Generally roosts in eucalypt hollows, but has also been found under loose bark on trees or in buildings.	Unlikely to occur within the site. No suitable habitat present.
Southern Myotis *Myotis macropus*	Vulnerable NSW BC Act	Generally roost in groups of 10 to 15 close to water in caves, mine shafts, hollow-bearing trees, storm water channels, buildings, under bridges and in dense foliage.	Possibly occurring over or in proximity to the site, but unlikely to rely on the site. No roosting habitat or food resources affected.
Golden-tipped Bat *Phoniscus papuensis*	Vulnerable NSW BC Act	Found in rainforest and adjacent wet and dry sclerophyll forest up to 1000m. Also recorded in tall open forest, *Casuarina*-dominated riparian forest and coastal *Melaleuca* forests.	Possibly occurring over or in proximity to the site, but unlikely to utilise available habitat within the site. No roosting habitat or food resources affected.

Greater Broad-nosed Bat *Scoteanax rueppellii*	Vulnerable NSW BC Act	The Greater Broad-nosed Bat is found mainly in the gullies and river systems that drain the Great Dividing Range. The species utilises a variety of habitats from woodland to moist and dry eucalypt forest and rainforest, though it is most commonly found in tall wet forests. Although this species usually roosts in tree hollows, it has been found in buildings.	Possibly occurring over or in proximity to the site, but unlikely to utilise available habitat within the site. No roosting habitat or food resources affected.
Large Bent-winged Bat *Miniopterus orianae oceanensis*	Vulnerable NSW BC Act	Caves are the primary roosting habitat, but also use derelict mines, stormwater tunnels, buildings and other man-made structures. The species form discrete populations centred on a maternity cave that is used annually. At other times of the year, populations disperse within about 300 km range of maternity caves.	Possibly occurring over or in proximity to the site, but unlikely to utilise available habitat within the site. No roosting habitat or food resources affected.
Southern Brown Bandicoot (eastern) *Isoodon obesulus obesulus*	Endangered NSW BC Act and EPBC Act	They are generally only found in heath or open forest with a heathy understorey on sandy or friable soils.	Unlikely to occur within the site. No suitable habitat present.
Australian Fur-seal *Arctocephalus pusillus doriferus*	Vulnerable NSW BC Act	Prefers rocky parts of islands with flat open terrain.	Unlikely to occur within the site. No suitable habitat present.
Southern Right Whale *Eubalaena australis*	Endangered NSW BC Act and EPBC Act	Temperate and subpolar oceanic waters of the Southern Hemisphere, with a circumpolar distribution between about 20°S and 55°S with some records further south to 63°S.	Unlikely to occur within the site. No suitable habitat present.
Sperm Whale *Physeter macrocephalus*	Vulnerable NSW BC Act	Wide, but patchy distribution from the tropics to the edge of the polar pack-ice in both hemispheres. Concentrations of Sperm Whales tend to occur where the seabed rises steeply from a greater depth, beyond the continental shelf.	Unlikely to occur within the site. No suitable habitat present.